# Optimizing The Effluent Treatment at a Coal Mine by Process Modelling

J P Maree, P Günther[1] and G Strobos

CSIR, Water, Environment and Forestry Technology, P O Box 395, Pretoria 0001, South Africa (email: jmaree@csir.co.za)
[1] S A Coal Estate, P O Box 2851, Witbank, 1035, South Africa

**Abstract**
The water network of a coal mine was audited and simulated by an interactive steady state model. The findings from this investigation were used to optimise the mine's water management strategy. Simulation of the interactions in the water network showed that:

1. Powder calcium carbonate can be used as an alternative to lime for neutralization of acid water at a reagent cost saving of 56 percent.
2. Gypsum crystallization in the primary neutralization and coal processing plants amount to 30% and 60% respectively.
3. During separate treatment of coal discard leachate and the less polluted streams, the capital cost for a neutralization/gypsum crystallization plant amounts to R3.0 million, compared to R10.3 million during combined treatment. Only slightly less gypsum removal is achieved during separate treatment, namely 8.9 t/d versus 9.5 t/d.
4. The OSI value can be controlled effectively at 1 by treating the feed water to the coal processing for sulphate removal. A flow of 222 $m^3$/h needs to be treated for removal of sulphate to 350 mg/l to obtain an OSI value of 0.98 (less than 1). The capital of a 222 $m^3$/h biological sulphate removal plant is estimated at R21.8 million (R4.1 million/(Ml/d)) and the running cost at R13.7 million/a (R4.10/$m^3$).
5. Pre-washing of the coal will result in reduced capital and running cost.

**Key words**: Water-network simulation, stream segregation, sulphate removal.

## Background

Modelling is a useful tool to select the most suitable Water Management Strategy (van Tonder, *et al*, 2000). Navigation Plant of Landau Colliery, Witbank, South Africa, is in the process of implementing a Water Management Strategy, which includes neutralisation and treatment for sulphate removal of certain selected mine water streams. The objectives of the Water Management Strategy include:

- Providing water which is fit for coal beneficiation plant use with a limited corrosion and scaling potential.
- Mitigation of the environmental impacts associated with mine water discharges.
- Closure of mine water circuits.
- Maximum re-use and utilisation of effluent streams.

The Toe Seep (coal discard leachate) Neutralization Project has been identified as the next component of the overall Water Management Strategy to be constructed. The purpose of this investigation was to determine, through a modelling exercise, the following:

- Degree of gypsum crystallization that occurs with the **existing system** in the primary neutralization plant and in the coal processing plant.
- The effect of gypsum crystallization on the gypsum saturation index after **separate and joint treatment of Toe Seep water** and less polluted streams.
- The effect of **gypsum crystallization on the effluent from the coal processing plant** when a side-stream of the flow from the thickener to the coal processing plant is treated.

- **Additional sulphate removal required** to ensure that the water in the coal processing plant is not over-saturated with respect to gypsum.
- Amount of sulphate that could be removed through **pre-washing** of the acid coal.
- Capital and running cost associated with various treatment options.

## Model description

A water flow and chemical mass balance model was developed which made provision for the following:

***Stages of the water network***

- Existing neutralization plant.
- New gypsum crystallization plant after existing neutralization plant.
- New Toe Seep plant which includes or excludes gypsum crystallization.
- Biological sulphate removal plant.
- Coal processing plant.
- Sludge disposal pond.
- Waste disposal area for fine coal and coal discard.

***Various input parameters***

- 5 flow rates (neutralization plant, discard leachate neutralization plant, sulphate removal plant, thickener underflow to discard dump and penstock return water).
- Chemical composition of 3 feed waters (feed to the neutralization plant, discard leachate and penstock).
- Chemical composition of treated water from the sulphate removal plant.
- Percentage sulphate removal through gypsum crystallization in the stages where gypsum crystallization occurs (discard dump and the coal processing plant and crystallization treatment plants).
- Alkali consumption (in the neutralization plant and in the coal processing plant).

***Output parameters***

- Flow rate, chemical composition and gypsum saturation level of all other streams.
- Capital and running costs.

The model is based on the following principles:

- Steady state equilibrium at each point.
- Electron neutrality. The mole equivalents of the cations (acidity, iron(II), iron(III), calcium and magnesium) is equal to that of the anions (sulphate).
- Over-saturation index (OSI)
  $= [SO_4]_{solution}/[SO_4]_{equilibrium}$
  where:
  $[SO_4]_{equilibrium} = 1500/48 + [Mg^{2+}]$ (determined empirically)
  [ ] = concentrations in mole equivalent per litre

## Results

Figure 1 shows the process flow diagram of the various treatment options listed above with the main input and output values.

The following treatment options were evaluated:

- Current situation.
- Joint treatment (neutralization and gypsum crystallization) of Toe Seep water and less polluted streams.
- Separate treatment (neutralization and gypsum crystallization) of Toe Seep water and less polluted streams.
- Gypsum crystallization of water from the coal processing plant.
- Tertiary sulphate removal.
- Pre-washing.

Appendix A shows the Input and Output values for the first Option (no treatment) as an example.

## Discussion

### Alkali cost

Powder calcium carbonate can be used as an alternative to lime for neutralization of acid water and offers the following benefits:

- Reduced alkali cost. The cost of powdered

$CaCO_3$ is R150/t (1 US$ = SAR 9.50, November 2002), compared to R610/t for unslaked lime. This represents an alkali saving of 56 percent (Table 1).

- No silo is required for storage. Only a sloped concrete slab or hard surface is needed.
- Reduced use of lime slaker.
- $CaCO_3$ is safe to handle. It reacts only under acidic conditions.
- No dust as the product contains 20% moisture.

**Table 1. Cost comparison between $CaCO_3$ and lime for the Toe Seep Neutralization plant.**

| Parameter | Alkali | |
|---|---|---|
| | $CaCO_3$ | Unslaked lime |
| Flow rate ($m^3$/h) | 40 | 40 |
| Acidity (g/l) | 10 | 10 |
| Acid load (t/d $CaCO_3$) | 9.6 | 9.6 |
| Molecular mass | 100 | 56 |
| Utilization efficiency (%) | 80 | 70 |
| Purity (%) | 75 | 85 |
| Consumption (t/d) | 16.00 | 9.04 |
| Delivered price (R/t) | 150.00 | 610.00 |
| Cost (R/year) | 880 000 | 2 010 000 |
| Saving (R/year) | 1 130 000 | 0 |
| Cost ratio | 44 | 100 |

***Gypsum crystallization under current conditions***

Acid water is over-saturated with respect to gypsum after neutralization with lime in the primary neutralization plant and in the coal processing plant. This results in scaling of pipelines, screens and other equipment (e.g. cyclones and spirals). The model can be used to calculate the percentage of gypsum crystallization in the various stages. Table 2 shows that gypsum crystallization in the primary neutralization plant amounts to 30% and to 60% in the coal processing plant.

**Table 2. Gypsum crystallization in the primary neutralization plant and in the coal processing plant.**

| Parameter | Primary neutralize. plant | Coal processing plant |
|---|---|---|
| Feed water (Ml/d) | 4.08 | 4.08 |
| Feed sulphate (mg/l $SO_4$) | 2 400 | 2 224 |
| Acid leachate from coal (t/d CaCO3) | | 6 |
| Sulphate from coal (mg/l $SO_4$) | | 1 471 |
| Sulphate from feed water and coal | | 3 695 |
| Equilibrium sulphate (mg/l $SO_4$) | 1 812 | 1 935 |
| Effluent sulphate (mg/l $SO_4$) | 2 224 | 2 640 |
| Sulphate removal (%) | 29.9 | 59.9 |

***Separate versus Combined treatment of strong and weak acidic streams***

Table 3 shows the benefit when discard leachate with an acidity of 11.5 g/l is neutralized separately from the less polluted streams with an acidity of 600 mg/l. The flow rate of the discard leachate is 40 $m^3$/h while that of the less polluted streams 120 $m^3$/h. During separate treatment the capacity of the capital construction is much lower than during combined treatment, namely R3.0 million versus R10.3 million. Only slightly less gypsum removal is achieved during separate treatment, namely 8.9 t/d versus 9.5 t/d.

***Gypsum crystallization in the coal processing plant***

The OSI value in the coal processing plant needs to be 1 or less to prevent gypsum scaling. This can be achieved in the following ways:

- The make-up water of the coal processing plant needs to be sufficiently under-saturated with respect to gypsum so that the OSI value is 1 or less after acid from the coal has leached into the water and is neutralized with lime or $CaCO_3$. This option will be discussed in the next section, using the biological sulphate removal process.

- Acid that leach out in the coal processing plant can instead of being neutralized with lime, be neutralized with $Mg(OH)_2$. $MgSO_4$, which is formed when $Mg(OH)_2$ is used for neutralization, has a high solubility and does not form scale as is the case with gypsum that forms during neutralization with lime or $CaCO_3$. A disadvantage of this approach is that it requires a separate stage where $Mg^{2+}$ is precipitated with lime at pH 12, followed by gypsum crystallization. The $Mg(OH)_2$ could be recycled.
- The water in the coal processing plant can be treated for gypsum crystallization to a level near its saturation level. Table 4, however, shows that a large volume needs to be treated for gypsum crystallization to make an impact. At a high flow rate of 200 $m^3/h$, the OSI is still 1.25, compared to 1.37 when zero treatment is applied. The total flow of 1 250 $m^3/h$ needs to be treated for gypsum crystallization to prevent gypsum scaling, which would not be an affordable option.

***Biological treatment***

From the previous section it is concluded that the most effective way to prevent gypsum scaling in the coal processing plant is to treat the feed water to below the saturation level of gypsum. The purpose of this section is to determine what volume needs to be treated and to what level sulphate needs to be removed. Table 5 shows the effect of biological treatment on the OSI value in the coal processing plant. A flow of 210 $m^3/h$ needs to be treated for removal of sulphate to 350 mg/l to obtain an OSI value of 0.98 (less than 1) (Figure 1 and Appendix A). The capital of a 222 $m^3/h$ biological sulphate removal plant is estimated at R21.8 million (R4.1 million/(Ml/d)) and the running cost at R4.10/$m^3$.

***Pre-wash of ROM in coal processing plant***

Leachate studies showed that when ROM coal is submerged in water, acid is washed off from the coal within a contact period of 5 min. This option will require the following modifications to the current operation at Navigation:

- Install a pre-wash system for the coal. Neutralized water could be used as wash water. A counter flow wash system will have the benefit that minimum acid remains on the coal that enters the coal washing plant.
- Neutralize the acid water resulting from the washing operation in the proposed Toe Seep Neutralization plant. Although the acid load from the ROM coal will remain the same, this change will offer the benefit that less acid needs to be neutralized in the coal processing plant and hence, scaling in the coal processing plant will be reduced. The reduction in scale will be directly related to how much acid is redirected to the Toe Seep Neutralization plant. The aim should be to transfer 80 % of the acid load currently neutralized in the coal processing plant to the Toe Seep Plant. The remaining 20 % acid could be neutralized by dosing powder $CaCO_3$-slurry at one or more places in the coal processing plant (similar to the current situation where lime is dosed).

The effect of such a change in the operation of the coal washing plant could be determined from the current model. Table 6 shows the effect when the alkali consumption in the coal processing plant is reduced from the current 6 t/d (as $CaCO_3$) to 3 and 1 t/d respectively. Implementation of such a washing operation will reduce the required capacity of a sulphate removal plant from 222 $m^3/h$ for when 6 t/d acid is neutralized in the coal processing plant to 150 $m^3/h$ and 105 $m^3/h$ for 3 and 1 t/d alkali respectively. These capacities include the volume of 40 $m^3/h$ to be discharged. If the alkali dosage is reduced from 6 to 1 t/d (as $CaCO_3$), the capital cost of the sulphate removal plant will be reduced from R25.3 million to R14.5 million and the running cost from R13.4 million/a to R8.5 million/a.

## Conclusions

1. Powder calcium carbonate can be used as an alternative to lime for neutralization of acid water at a saving of 56 percent.
2. Gypsum crystallization in the primary neutralization and coal processing plants

amounts to 30% and 60% respectively.

3. During separate treatment of coal discard leachate and the less polluted streams, the capital cost for a neutralization/gypsum crystallization plant amounts to R3.0 million, compared to R10.3 million during combined treatment. Only slightly less gypsum removal is achieved during separate treatment, namely 8.9 t/d versus 9.5 t/d.
4. Gypsum crystallization from the water in the coal processing plant is an inefficient method for controlling the OSI value.
5. The OSI value can be controlled effectively at 1 by treating the feed water to the coal processing for sulphate removal. A flow of 222 $m^3$/h needs to be treated for removal of sulphate to 350 mg/l to obtain an OSI value of 0.98 (less than 1). The capital of a 222 $m^3$/h biological sulphate removal plant is estimated at R21.8 million (R4.1 million/(Ml/d)) and the running cost at R4.10/$m^3$.
6. Pre-washing of the coal will result in reduced capital and running cost.

## Reference


van Tonder, G.J., Theron, D.J. and Maree, J.P. 2000. Cost optimisation of the water management strategy by steady-state modelling of the water network of a copper/nickel mine and processing plant, *Proceedings of the WISA 2000 Conference*, Sun City, South Africa, 28 May-1 June.


## Acknowledgements


Sincere thanks are due to the following organizations for their financial and logistical support of the research reported in this paper:

- **Anglo Coal (Navigation Section of Landau Colliery)**, for financial support.
- **The National Research Foundation (NRF)** who provided funding through their Technology and Human Resources for Industry Programme (THRIP) for CSIR projects on neutralisation and sulphate removal.


Table 3. Effect of separate and combined treatment (neutralization and gypsum crystallization) on sulphate removal.

| **Paramater** | | **Separate Option 2.1** | **Combined Option 1.3** |
|---|---|---|---|
| Flow ($m^3$/h) | Leachate discard | 40 | |
| | Make-up | 120 | |
| | Combined | | 160 |
| $SO_4$ feed (mg/l) | Leachate discard | 11500 | |
| | Make-up | 2531 | |
| | Combined | | 4773 |
| $SO_4$ treated (mg/l) | | 2289 | 2086 |
| OSI after neutralization and crystallization | | 1.16 | 1.05 |
| Gypsum (t/d) | | 8.9 | 10 |
| Capital cost (R) | | 3 000 000 | 9 800 000 |
| Running cost (R/$m^3$) | | 1.08 | 1.08 |

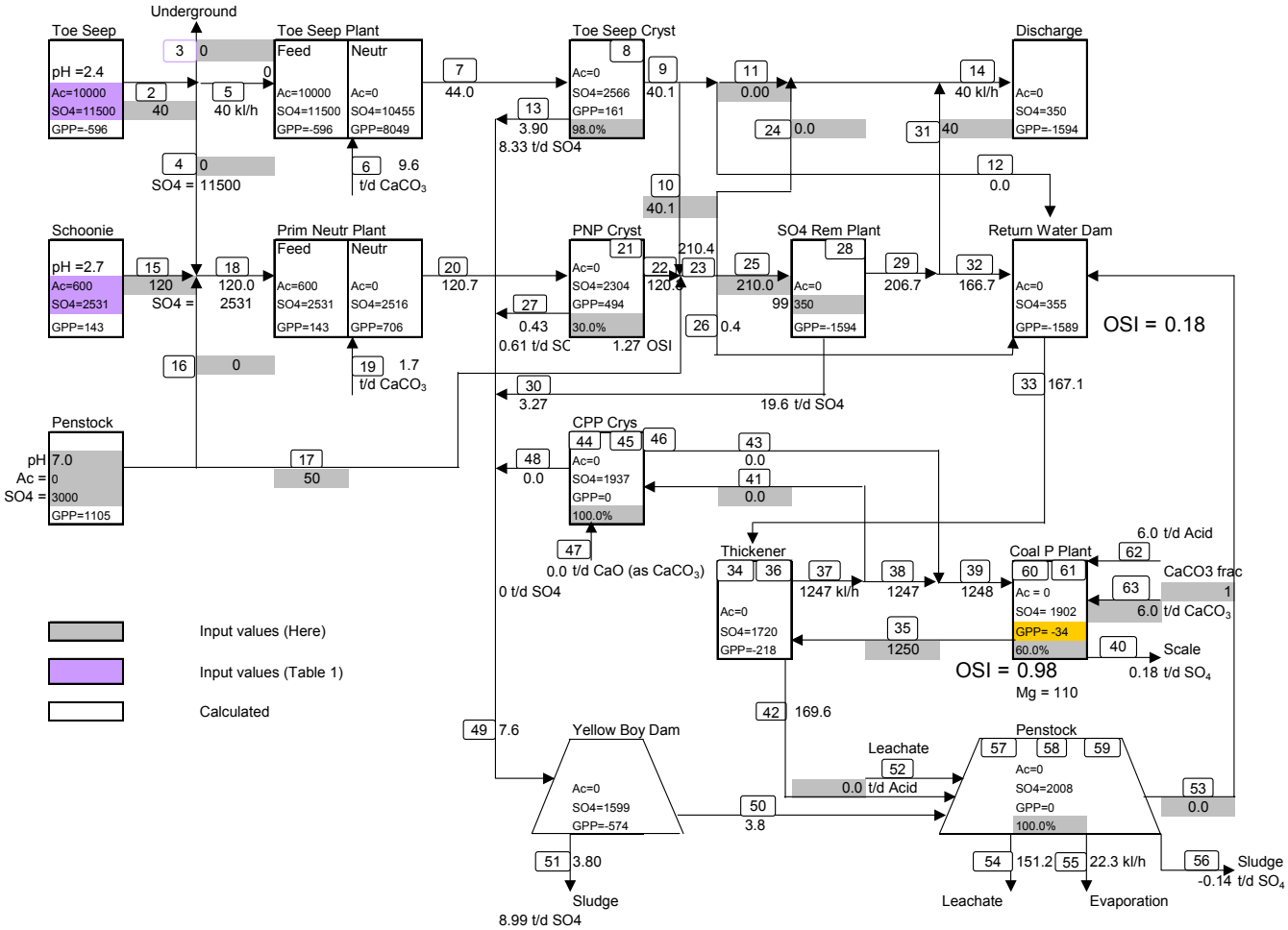


Option 4.3 Water flow and chemical mass balance for various effluent treatment scenarios. (Biological sulphate removal - 210 m3/h)

**Figure 1. Water flow and chemical mass balance when no treatment is applied.**

**Table 4. Effect of the capacity of a gypsum crystallization plant on the OSI value of the coal processing plant.**

| **Feed rate ($m^3$/h)** | **OSI** |
|---|---|
| 0 | 1.37 |
| 100 | 1.30 |
| 200 | 1.25 |

**Table 5. Effect of biological treatment on the OSI value in the coal processing plant.**

| **Parameter** | **Separate neutralize. + Biological** Option 4.1 | **Separate neutralize. + Biological** Option 4.2 | **Separate neutralize. + Biological** Option 4.3 |
|---|---|---|---|
| OSI in CPP feed | 1.21 | 0.86 | 0.12 |
| OSI in CPP | 1.41 | 1.28 | 0.98 |
| Sulphate removal (t/d $SO_4$) | 22.4 | 24.4 | 28.8 |
| Plant capacity ($m^3$/h) | | | |
| Toe Seep neutralization/crystallization | 40 | 40 | 40 |
| Sulphate removal | 50 | 105 | 222 |
| Capital cost for biological plant (R) | 4 920 000 | 10 332 000 | 21 844 800 |
| Capital cost for biological plant (R/(Ml/d)) | 4 100 000 | 4 100 000 | 4 100 000 |
| Running cost for biological plant (R/$m^3$) | 3.53 | 3.79 | 4.10 |

**Table 6. Effect of pre-coal washing on the OSI value in the coal processing plant.**

| Parameter | Alkali dosage to CPP (t/d $CaCO_3$) | | |
|---|---|---|---|
| | 6 | 3 | 1 |
| | Option 6.1 | Option 6.2 | Option 6.3 |
| OSI: | | | |
| Feed to coal processing plant | 0.16 | 0.58 | 0.86 |
| In coal processing plant | 1.00 | 1.00 | 1.00 |
| Capacity of sulphate removal plant ($m^3$/h) | 215.00 | 150.00 | 105.00 |
| Capital cost (R) | 25 295 529 | 18 899 529 | 14 471 529 |
| Running cost (R/a) | 13 429 951 | 10 515 088 | 8 505 088 |

# APPENDIX A

**INPUT AND OUTPUT PARAMETERS**

| **OUTPUT:** | | | | | |
|---|---|---|---|---|---|
| | | | | | Working column Option 4.3 (Biological sulphate removal - 222 m3/h) |
| Cryst. In PNP (%) | | | | | 0.30 |
| Cryst. in Toe Seep Neutralization/Crystallization plant (%) | | | | | 0.98 |
| Cryst. In Side-stream CPP Crystallization plant. (m3/h) | | | | | 0.00 |
| CSIRosure plant (m3/h) | | | | | 222.00 |
| Mg Rem in CPP Cr | No | Yes | | 0 | No |
| Mg Rem in TSP | No | | 1500 | 1 | 1 500.00 |
| | No | | 1100 | 1 | 1 100.00 |
| Toe Seep (Ml/d) | | | | | 0.96 |
| Schonie (Ml/d) | | | | | 0.00 |
| OUTPUTS: | | | | | |
| SO4 | PNP out | | | | 2 304.20 |
| | Toe Seep Out | | | | 1 287.09 |
| GPP: | CPP in | | | | -1 593.33 |
| | CPP out | | | | -35.06 |
| OSI | CPP in | | | | 0.12 |
| | CPP out | | | | 0.98 |
| Gypsum produced (t/d as SO4) | | | | | |
| | PNP plant | | | | 0.61 |
| | Toe Seep Plant | | | | 9.68 |
| | CPP Crystallization | | | | 0.00 |
| | Pennstock | | | | -0.15 |
| | CPP | | | | 0.19 |
| | Biological sulphate removal | | | | 18.42 |
| | Total Gypsum | | | | 28.75 |
| Treatment capacity (Ml/d) | | | | | |
| | PNP Cryst | | | | 2.90 |
| | Toe Seep Cryst | | | | 1.06 |
| | CPP Crystallization | | | | 0.00 |
| | Sulphate removal | | | | 5.33 |
| Capital cost (R/Ml/d) | PNP Crystallization | | | | 0.00 |
| | Toe Seep Crystallization | | | | 4 000 000.00 |
| | Sulphate removal | | | | 4 100 000.00 |
| Capital cost (R) | | | | | |
| | PNP Cryst | | | | 0.00 |
| | Toe Seep Cryst | | | | 4 139 529.41 |
| | CPP Crystallization | | | | 0.00 |
| | Sulphate removal | | | | **21 844 800.00** |
| | Total | | | | 25 984 329.41 |
| Prices | | | | | |
| | CaCO3 (as 100%) (R/t) | | | | 163.75 |
| | CaO (as 100%) (R/t) | | | | 544.44 |
| | Ethanol (R/t) | | | | 3 500.00 |
| | Electricity (R/m3) | | | | 1.00 |
| | Labour (R/m3) | | | | 0.50 |
| | Maintenance (R/m3) | | | | 0.50 |
| | Admin (R/m3) | | | | 0.10 |
| Running cost (R/a) | | | | | |
| | CaCO3 | | | | 1 035 672.99 |
| | CaO | | | | 322 319.80 |
| | Ethanol | | | | 5 252 236.80 |
| | Electricity | | | | 3 387 668.96 |
| | Labour | | | | 1 693 834.48 |
| | Maintenance | | | | 1 693 834.48 |
| | Admin | | | | 338 766.90 |
| | Total | | | | 13 724 334.39 |
| | Total Chemical | | | | 6 610 229.58 |
| Value of CaCO3 produced (R/a) | | | | | 753 529.66 |
| Net Chemical cost (R/a) | | | | | 5 856 699.92 |
| Volume treated (m3/h) | | | | | 382.00 |
| Unit cost | Capital (R/(Ml/d)) | | | | **2 834 240.38** |
| | Running (R/m3) | | | | **4.10** |
| CaCO3 usage (as 100 %) (t/d): | | | | | |
| | Toe Seep (t/d CaCO3) | | | | 9.60 |
| | PNP (t/d CaCO3) | | | | 1.73 |
| | CPP (t/d CaCO3) | | | | 6.00 |
| | CPP Cryst. (t/d CaCO3) | | | | 0.00 |
| | Total (t/d CaCO3) | | | | 17.33 |
| CaO usage (as 100%) (t/d) | | | | | 1.62 |
| Ethanol usage (g EtOH/g SO4) (80 % Eff) | | | | | 0.40 |
| Ethanol usage (t/d EtOH) | | | | | 4.11 |
| CaCO3 production (as 100%) (t/d): | | | | | |
| | Biological plant | | | | 10.71 |
| | Toe Seep Gypsum Cryst | | | | 1.90 |
| Total (t/d) | | | | | 12.61 |

| **INPUTS:** | | | | |
|---|---|---|---|---|
| Chemical composition (mg/l): | | | | |
| Toe Seep | Ac | | | 10 000.00 |
| | H+ | | | 1 145.93 |
| | Fe(II) | | | 4 000.00 |
| | Fe(III) | | | 630.00 |
| | Ca | | | 376.85 |
| | Mg | | | 252.00 |
| | SO4 | | | 11 500.00 |
| | Alk | | | |
| | pH | | | 2.80 |
| Schoongesicht | Ac | | | 600.00 |
| | H+ | | | 27.29 |
| | Fe(II) | | | 222.00 |
| | Fe(III) | | | 50.00 |
| | Ca | | | 684.54 |
| | Mg | | | 79.00 |
| | SO4 | | | 2 531.00 |
| | Alk | | | |
| | pH | | | 2.70 |
| Flow rates (m3/h) | Toe Seep | | | 40.00 |
| | Toe Seep to Underground | | | 0.00 |
| | Toe Seep to PNP | | | 0.00 |
| | Schoongesicht | | | 120.00 |
| | Sconie to Toe Seep Neutr P | | | 0.00 |
| | CSIRosure | | | 222.00 |
| | CCP Crystallization | | | 0.00 |
| Iron(II) removal: | see blue | | | |
| Toe Seep Plant | No | Yes | 1 | Yes |
| PNP | No | Yes | 1 | Yes |
| Gypsum crystallization: | | | | |
| | Toe Seep | % | | 0.98 |
| | PNP | % | | 0.30 |
| | CPP | % | | 0.60 |
| | CPP Crys | % | | 1.00 |
| | Penstock | % | | 1.00 |
| CSIRosure | | | | |
| | Effl SO4 conc (mg/l SO4) | | | 350.00 |
| CaCO3 concentration (%) | | | | 10.00 |
| SS concentration (%) | | | | 25.00 |
| SS conc. Yellow B D (%) | | | | 50.00 |
| Acid and sulphate balance | | | | |
| STAGE | | | | ACID t/d CaCO3 |
| INPUT | | | | 17.33 |
| Inflows: | | | | 1.73 |
| Schoongesicht | | | | 1.73 |
| Coal: | | | | 15.60 |
| ROM/Plant | | | | 6.00 |
| Discard leachate | | | | 9.60 |
| | | | | 0.00 |
| OUTPUT | | | | 17.33 |
| Effluents: | | | | 0.00 |
| Underground | | | | 0.00 |
| Seepage | | | | 0.00 |
| Discharge | | | | 0.00 |
| Neutralization/Crystallization: | | | | 17.33 |
| Primary Neutralization Plant | | | | 1.73 |
| Coal Processing Plant (CPP) | | | | 6.00 |
| Toe Dam Neutralization Plant | | | | 9.60 |
| CPP Crystallization | | | | 0.00 |
| Penstock | | | | 0.00 |
| Sulphate removal Plant | | | | 0.00 |
| STAGE | | | | SO4 t/d SO4 |
| INPUT | | | | 27.69 |
| Inflows: | | | | 7.29 |
| Schoongesicht | | | | 7.29 |
| Coal: | | | | 20.40 |
| ROM/Plant | | | | 5.76 |
| Discard leachate | | | | 14.64 |
| | | | | 0.00 |
| OUTPUT | | | | 27.69 |
| Effluents: | | | | 7.08 |
| Underground | | | | 0.00 |
| Seepage | | | | 6.74 |
| Discharge | | | | 0.34 |
| Neutralization/Crystallization: | | | | 20.61 |
| Primary Neutralization Plant | | | | 0.61 |
| Coal Processing Plant (CPP) | | | | 0.19 |
| Toe Dam Neutralization Plant | | | | 9.68 |
| CPP Crystallization | | | | 0.00 |
| Penstock | | | | -0.15 |
| Sulphate removal Plant | | | | 10.28 |