TABLE OF CONTENTS
CHAPTER III

Page

III. SEDIMENT REMOVAL THROUGH SEDIMENTATION PONDS

3.1 Site Selection 3.1

3.1.1 General Considerations 3.1
3.1.2 Topography Considerations 3.2

3.1.2.1 Steep Sloped Terrain 3.2
3.1.2.2 Mild Sloped Terrain 3.3

3.1.3 Sedimentation Ponds Located on Main Drainageways 3.4
3.1.4 Sedimentation Ponds Located off Main Drainageways 3.4
3.1.5 Source of Sediment 3.5
3.1.6 Accessibility 3.5
3.1.7 Mining Considerations 3.6
3.1.8 Field Investigation 3.6

3.2 Data Requirements 3.8

3.2.1 Hydrology 3.8
3.2.2 Sediment Data 3.8

3.2.2.1 Influent Sediment Size Distribution . . 3.9
3.2.2.3 Sediment Yield 3.12

3.2.3 Inflow Suspended Solids Concentration 3.12

3.3 Effluent Limitations 3.13

3.3.1 Suspended Solids Limitation 3.13
3.3.2 Settleable Solids Limitation 3.13

3.4 Trapping Efficiency 3.16
3.5 Settleable Solids Concentration 3.20
3.6 Storage Volume Requirement 3.29
3.7 Available Storage Volume 3.30
3.8 Sedimentation Pond Configuration 3.36

3.8.1 Ideal Settling 3.36
3.8.2 Nonideal Settling 3.39

3.8.2.1 Flow Currents 3.39
3.8.2.2 Delta Formation 3.40

TABLE OF CONTENTS (continued)
CHAPTER III

		Page
3.8.2.3	Short Circuiting and Turbulence	3.40
3.8.2.4	Scour and Resuspension	3.40
3.8.3	Control of Nonideal Settling	3.40
3.8.3.1	Short-Circuiting Factor	3.43
3.8.3.2	Length-to-Width Ratio	3.43
3.8.3.3	Permissible Inlet Velocity	3.44
3.8.3.4	Permissible Flow-Through Velocity	3.44
3.9	Sedimentation Pond Outlet Control Measures	3.46
3.9.1	Principal Spillways	3.46
3.9.1.1	Open Channel Spillways	3.46
3.9.1.2	Drop Inlet Spillways	3.47
3.9.1.3	Pipe Culvert Spillways	3.47
3.9.1.4	Efficiency of Principal Spillways	3.50
3.9.2	Dewatering Devices	3.50
3.9.3	Principal Spillway Modifications	3.54
3.9.3.1	Weir Troughs	3.56
3.9.3.2	Floating Discharge	3.56
3.9.3.3	Filtering	3.58
3.9.3.4	Gated Spillways	3.58
3.9.3.5	Anti-Vortex Devices	3.60
3.9.4	Emergency Spillways	3.60
3.9.5	Erosion Control Below Spillways	3.65
3.9.5.1	General	3.65
3.9.5.2	Riprap	3.66
3.10	Summary	3.67

LIST OF TABLES
CHAPTER III

		Page
Table 3.1	Suggested Particle Size Distribution for Soil Textural Class	3.11
Table 3.2	Development of Settleable Solids Size Distribution	3.24
Table 3.3	Size Distribution for Particles Smaller than 0.011 mm	3.29
Table 3.4	Stage-Storage Relationship Development	3.36
Table 3.5	Permissible Velocities for Vegetated Spillways	3.63
Table 3.6	Permissible Spillway Velocities after Aging	3.64

LIST OF FIGURES
CHAPTER III

		Page
Figure 3.1	Imhoff cone test apparatus	3.15
Figure 3.2	Required trapping efficiency to meet various effluent limitations	3.18
Figure 3.3	Definition of trapping efficiency for various particle sizes	3.19
Figure 3.4	Influent sediment size distribution	3.21
Figure 3.5	Settleable solids size distribution	3.24
Figure 3.6	Definition of percentage intervals	3.27
Figure 3.7	Water routing curve, S/V versus T_b	3.31
Figure 3.8	Water routing curve, Q_I/Q_O versus T_b	3.32
Figure 3.9	Definition sketch to determine incremental storage volume	3.33
Figure 3.10	Particle size versus detention time for various depths	3.38
Figure 3.11	Schematic of delta formation	3.41
Figure 3.12	Sedimentation ponds with dead storage spaces	3.42
Figure 3.13	Typical drop inlet spillway	3.48
Figure 3.14	Typical pipe culvert spillway	3.49
Figure 3.15	Subsurface drain	3.52
Figure 3.16	Single perforation of riser barrel	3.53
Figure 3.17	Siphon dewatering methods	3.55
Figure 3.18	Weir trough	3.57
Figure 3.19	Floating weir	3.59
Figure 3.20	Anti-vortex device	3.61

III. SEDIMENT REMOVAL THROUGH SEDIMENTATION PONDS

The design of sedimentation ponds is based upon satisfying effluent limitations. These limitations are established for specified stream water quality criteria and design precipitation runoff event. Sedimentation ponds are usually designed in the preliminary stages of the mine plan and therefore, there is little or no available information on base flow conditions. Because of this, ponds are designed for the design precipitation runoff event and the pond effluent for base flow conditions is tested after the pond becomes operational. If base flow effluent limitations cannot be satisfied, modifications can be made to the pond. Generally, the design runoff event will control the sedimentation pond design unless sediment inflow for base flow conditions is composed of high concentrations of fine silts and clays.

The following sections describe the information that is required for designing a sedimentation pond to meet effluent limitations. The pond design is based upon ideal settling conditions with conservative factors incorporated into the design to account for nonideal settling conditions.

The design begins by selecting a particle size which must be removed in the pond such that effluent limitations are satisfied. Determining the pond configuration requires an interactive process which begins by assuming a depth. The required storage volume and the available storage volume are determined and compared to each other. When the required storage volume is larger than the available storage volume, a new depth is assumed and the design process is repeated. Once the available storage volume is adequate, the pond configuration is checked based upon nonideal settling conditions. The design procedure and example presented in Chapter VI show how the information presented in the following sections is used in sedimentation pond design.

3.1 Site Selection

3.1.1 General Considerations

Selecting a sedimentation pond location requires consideration of several factors. In all cases, sedimentation ponds must be constructed in locations where it will be possible to direct or divert all surface runoff from disturbed areas into sedimentation ponds throughout the life of mining operations. Other factors which are of primary importance and should be considered

in selecting a sedimentation pond location include the topography of the mine site, locating major sources of sediment, accessibility of the sedimentation pond, availability of construction materials, and the direction of mining. In many instances these factors will limit the number of viable locations that are available for sedimentation pond construction. In particular, availability of suitable sites for a sedimentation pond location will be controlled, to a large extent, by the topography of the mine site. In addition, ponds must be constructed prior to any disturbance of the mine area. Through careful planning practices and field investigation, the sedimentation pond locations which will meet this objective can be identified.

3.1.2 Topography Considerations

3.1.2.1 Steep Sloped Terrain

Throughout the United States surface mining operaions are often located in steep sloped terrain. This is true for the Appalachian mining region, the Rocky Mountain, and parts of northern California and Washington. In the regions which are characterized by steep sloped terrain, the topography becomes the most important controlling factor in the site seletion for a sedimentation pond location. The main problem in finding a suitable sedimentation pond location is to determine where an adequate storage volume can be provided.

Where surface mining operations are located in the upper part of a watershed, the topography is characterized by steep slopes and v-shaped drainageways. It is usually desirable to locate the sedimentation pond as close to the mining operation as possible; therefore, the only site that is often available for a sedimentation pond location is the v-shaped drainageway directly downstream of the surface mine operation. A sedimentation pond which incorporates the use of an embankment will have to be used. The storge volume of the sedimentation pond can be increased by excavating upstream of the embankment. Often times the storage capacity provided by the embankment including any upstream excavation does not provide the storage volume required to achieve effluent limitations. To overcome the problem of sedimentation pond location in steep sloping terrain, there are two alternatives available to the operator.

The first alternative is to construct a sedimentation pond at a location farther downstream within the watershed where the slope of the drainageway becomes milder and the shape of the drainageway becomes u-shaped. The disadvantage of this alternative is that runoff from a much larger area will need to be contained and treated, thereby requiring the construction of a much larger structure.

The second alternative is to construct a series of sedimentation ponds located in the steep, narrow drainageways where the runoff from the disturbed mining areas passes through each sedimentation pond (multiple sedimentation ponds).

It should be noted here that there are other alternatives to sedimentation ponds for sediment and erosion control. Depending on the size of the area, several devices and techniques have been used. Refer to "Design of Sediment Control Measures for Small Areas in Surface Coal Mining" (OSM, 1982) for further consideration of alternatives to sedimentation ponds.

3.1.2.2 Mild Sloped Terrain

There is much more flexibility in selecting a sedimentation pond location in mild sloped terrain. The physical constraints imposed by the topography are less than for steep sloped terrain and therefore, more attention may be directed toward the other primary factors considered in the selection of a sedimentation pond site.

Sedimentation ponds may be located on or off drainageways. Small drainageways are often selected for a sedimentation pond location where an embankment is used with or without excavation to provide the storage volume required. Due to the milder drainageway profile and milder slopes of the valley, the sedimentation pond located in the mild sloped terrain will normally have a greater length and width for any height of dam specified, thereby providing more storage capacity.

Off drainage locations are generally preferred when there is a suitable location available for sedimentation pond construction. Natural depression areas are good locations for sedimentation ponds. An embankment can be constructed across the downstream end of the depression area and the storage volume may be increased by excavation.

3.1.3 Sedimentation Ponds Located on Main Drainageways

Sedimentation ponds located on main drainageways are usually found in surface mining operations located in steep terrain. Due to topographic constraints, this may be the most cost-effective way to control sediment. The main drainageway may be either an ephemeral or perennial stream. The sedimentation pond located on a perennial stream will have a permanent pool, whereas sedimentation ponds located on main drainageways which are ephemeral may be either a dry basin or permanent pool.

The disadvantage of locating a sedimentation pond on a main drainageway is that the surface runoff from both disturbed and undisturbed areas will have to be detained long enough to achieve effluent limitations. This requires amuch larger storage volume be provided and therefore, the construction of a much larger sedimentation pond structure. In addition, chances of a sedimentation pond being washed away during a major flood event are increased due to control of runoff from a larger drainage area. Sedimentation ponds located on drainageways which are perennial streams must be desgined to meet base flow water quality limitations. When the sedimentation pond is removed, reclamation of the drainage channel will be required. The channel will have to be restored to its original shape, slope, and channel protection.

It is preferrable to select a sedimentation pond location which will not be located in a main drainageway. However, the topographic constraints of the mine site area may be such that the main drainageway is the only possible site for a sedimentation pond location.

3.1.4 Sedimentation Ponds Located off Main Drainageways

Off main drainageways sedimentation ponds are generally used in rolling and mild terrain where the topography does not restrict the location to the extent as it does in steep sloped terrain. The types of sedimentation ponds used ~~in off~~ main drainageway locations are embankment or some combination of embankment and excavation. The sedimentation ponds may be constructed as either a permanent pool or dry basin.

The off main drainageway location has several advantages over the on main drainageway location. A sedimentation pond in an off main drainageway location can generally be constructed closer to the sediment source and therefore, designed for a smaller influent volume. This location avoids unnecessary

treatment of runoff from undisturbed areas. Essentially, the base flow is zero, therefore the pond is generally designed based on precipitation events.

Gated outlets can be used on sedimentation ponds located in an off main drainageway site to control the detention time between runoff events. Also, the chances of an embankment sedimentation pond failing during a major storm event are reduced since only the runoff from a much smaller area will have to be controlled. However, again topography will play an important role as to whether an off main drainageway location will be feasible for the operator to construct.

3.1.5 Source of Sediment

During the development of a mine plan, the locations that will be major sources of sediment in the surface mining operation should be identified. Major sediment sources include haul and access roads, areas being cleared, spoil piles, and areas being reclaimed. As mining progresses the locations of major sediment sources change. Thus, the location of sediment sources throughout the life of the mine should be considered during the planning stages.

Sedimentation ponds should be located as close to major sediment sources as possible. Locating sedimentation ponds in this manner has several advantages from both a sediment control and construction viewpoint. Controlling the sediment as close to the source as possible may require the construction of several smaller sedimentation ponds as opposed to one or two larger ponds. The smaller sedimentation ponds may be constructed directly downstream of the major sediment sources thus requiring sediment control of only the disturbed areas. The net effect of this is the influent volume is reduced by avoiding collection of runoff from undisturbed areas, thereby reducing the required storage volume to achieve effluent limitations.

3.1.6 Accessibility

Improper, or lack of, maintenance for sedimentation ponds is one of the major reasons for poor sediment removal efficiencies. Often the lack of maintenance is due to inaccessibility to the location of the sedimentation pond. Sedimentation ponds are often constructed in locations that are remote from the surface mining operation and therefore, access roads to the sedimentation

pond are given little regular attention and maintenance. The accessibility to a sedimentation pond should be a primary consideration in the planning and design of sedimentation ponds.

The access road should be designed considering the type of equipment which will use the road. Where possible, the access road should be designed such that the road drainage will be directed into the sedimentation pond. Other sediment control measures or the construction of another sedimentation pond will be required downstream of the access road to prevent off-site damage if road drainage into the sedimentation pond is not possible.

3.1.7 Mining Considerations

Throughout the life of the surface mining operations, the locations of the major sources of sediment will constantly change due to the progression of mining. Sedimentation pond locations should be selected considering the direction of mining so it will be possible to direct or divert all surfce runoff from disturbed areas into the pond throughout the life of the mining operations. In all cases, time of exposure of cleared land should be kept to a minimum to avoid filling of the sedimentation pond prematurely.

3.1.8 Field Investigation

Field investigation is essential in the development of an effective sediment control plan. After the operator has an understanding of the factors that must be considered in selecting a sedimentation pond location, several preliminary sedimentation pond locations can be selected using the most recent topographic maps of the mine area. A field investigation should then be conducted to verify information from topographic maps, survey the physical features of each site, and identify any problems which may be encountered at each site.

There are several surface features that should be noted at each potential sedimentation pond location. These features include soil type, vegetative cover, profile and side slopes of the drainageway, channel shape, channel protection, and the capability of each site to provide the design storage volume.

The previously mentioned features are all interrelated in influencing the erosional potential of the site and the suitability of the site as a sedimentation pond location. An overview of each site should be conducted noting any

problems relating to unstable soils or erosion. These features will be evidenced by small landslides, bank sloughing, and gully or rill erosion.

The soil type and vegetative cover at the site should be investigated and noted. Vegetation reduces the erosion potential and tends to stabilize the soil. If a large area will be cleared for mining operations and the construction of the sedimentation pond, protective measures may be required to protect the barren soil. Where some type of excavation might be required, it is not desirable to disturb soils which would become unstable. This will happen for soils which have little cohesion and the problem is increased if the sedimentation pond is constructed in steep sloped terrain. Once unstable soils are disturbed, a continous sloughing of the banks will occur which will reduce the sediment removal efficiency of the pond as well as threaten the stability of the embankment. However, sedimentation ponds located in soils which have a high clay content may pose a problem in achieving effluent limitations. Due to turbulence within the pond and wave action on the banks, high concentrations of colloidal particles could result and will require the addition of coagulants or flocculants under base flow conditions.

In steep sloped areas where sedimentation ponds are often constructed on drainageways, the drainageway channel shape and protection should be investigated. The drainageway channel protection should be noted since the channel will have to be restored after the removal of the embankment. The channel may have developed an armoring layer of a certain size particle or it may be protected only by vegetation. It can be expected that scouring will occur downstream of the sedimentation pond and the magnitude of scouring will be greater for the vegetation-lined drainageway than for the drainageway which has already developed an armoring layer.

Once in the field, the designer should verify the information on the topographic maps and survey the physical features at each site. After the field investigation, a review and comparison of the advantages and disadvantages of each site can be evaluated to select the best sedimentation pond location.

3.2 Data Requirements

Information that is required to design a sedimentation pond can be broken into three categroies: hydrology, sediment data, and inflow suspended solids concentration. The following sections describe what specific information is required for sedimentation pond design.

3.2.1 Hydrology

Hydrologic information required to design a sedimentation pond includes the peak inflow rate and the runoff volume for the design storm event. In addition, where ponds receive the inflow from the mining pit, pumping, or are located on a perennial stream, the inflow rate for base flow conditions must be determined.

For the design storm event, an inflow hydrograph must be developed from which the peak inflow rate and runoff volume can be determined. There are several references available which describe inflow hydrograph development (OSM, 1982; Bureau of Reclamation, 1977; Barfield, 1981; Soil Conservation Service, 1975).

For sedimentation ponds which receive inflow by pumping, the designer will have to determine the inflow rate for base flow conditions. For ponds which are located on perennial streams, the designer can use historical data if available. However, this type of information may be very limited. Therefore, the inflow rate for base flow conditions or from pumping will generally have to be measured after the pond has been constructed.

3.2.2 Sediment Data

The sediment data required for pond design are the particle size distribution and total sediment yield during a runoff event. The design of a pond occurs during the planning stages before actual mining starts. Therefore, information on the particle size distribution of the sediment runoff from the disturbed area is not generally available for the specific site. The following sections discuss the methods of obtaining sediment size distribution and sediment yield.

3.2.2.1 Influent Sediment Size Distribution

The most important sediment data required to design a sedimentation pond to meet effluent limitations is the particle size distribution of the sediment influent. The particle size distribution should represent the worst condition during the life of the mine. From past and present experience, the worst condition occurs during the reclamation phase. Two conditions during the reclamation phase must be considered.

The first condition to be considered is before the topsoil or "A" horizon has been replaced. The soil which is eroded, and hence the influent particle size distribution, will be represented by the graded overburden. The second condition to be considered is after the topsoil or "A" horizon has been replaced. For this condition, the particle size distribution of the eroded soil will be represented by the topsoil. Whichever condition results in a particle size distribution with the highest percentage of particle sizes in the silt range (0.001 to 0.074 mm) will be selected for the design influent particle size distribution. The best way to estimate the particle size distribution is to obtain size distribution information from previous and nearby mining operations. When mining operations within the same area or areas with the same soil texture exist, determination of particle size distributions of sediment runoff from existing analysis can be used. Before a particle size distribution from a nearby site is used, several considerations and comparisons must be made so the information does represent the site under consideration.

1. Soil characteristics at both sites should be very similar including soil types below the surface which are disturbed during mining.

2. Slopes, drainage, and sediment transport characteristics of both sites should be evaluated and compared.

3. The type of mining and amount of area disturbed at both sites should be evaluated.

4. Data from as many samples and sites should be collected and evaluated to provide a good estimate.

5. The magnitude of the runoff event during which the sample was collected should be considered.

When these data do not exist, but nearby sites do exist, sampling and laboratory analysis should be conducted whenever possible.

Another method for developing particle size distribution information is based on the site specific soil textural class and physical properties. Generally, soil physical properties occurring at a specific site can be identified using information given in standard Soil Conservation Service (SCS) soil surveys. These investigations consist of classifying physical, chemical, and biological characteristics of soils extending to depths of up to six feet. The U.S. Department of Agriculture (USDA) publishes reports and maps of their soil surveys, usually on a county basis.

A procedure for determining particle size distribution based on soil textural class is presented for use with this manual. A textural class is simply a name given each soil which designates the ranges of sand, silt, and clay sizes it contains. This class can be obtained from SCS soil series descriptions, other soil survey data in the vicinity, soil data from the mine plan, field estimation by a soil scientist, or laboratory analysis. After determining the textural classification, the corresponding particle size groups are then determined from Table 3.1.

Where the mining area has several soil textural classifications within the drainage boundary, a composite size distribution can be developed. For each particular soil textural classification, the sediment size distribution given in Table 3.1 will be multiplied times the fraction of the disturbed area that each soil textural class covers. The values for each soil textural class are then added together to form a representative composite size distribution. An example of developing a representative composite size distribution is given in the design example in Chapter VI.

The sediment size distribution based on textural class is not recommended for use if more detailed soil data are available at the mine site. Also, it is important that the soil data describing the material below the surface (exposed during mining) be considered during development of the particle size distribution. The designer should realize that the design can be no better than the information on which it is based. To help eliminate significant changes and modifications to the pond after construction, the particle size distribution utilized should be a conservative estimate.

Table 3.1. Suggested Particle Size Distribution for Soil Textural Class.

Textural Class	Clay (< 0.002 mm) (%)	P_1 Silt (0.002-0.05 mm) (%)	P_2 Very Fine Sand (0.05-0.01 mm) (%)	P_3 Fine, Medium Coarse Sand (0.1-1.0 mm) (%)	P_4 Very Coarse Sand (1.0-2.0 mm) (%)
Sand	2	10	15	35	38
Loamy Sand	5	15	20	40	20
Sandy Loam	5	25	20	20	30
Loam	10	30	10	25	25
Silty Loam	20	60	5	15	--
Silt	5	90	5	--	--
Sandy Clay Loam	25	25	10	30	10
Clay Loam	30	40	10	10	10
Silty Clay Loam	35	55	5	--	5
Sandy Clay	55	5	5	10	25
Silty Clay	45	45	5	5	--
Clay	65	20	10	5	--

The size distribution for base flow conditions can be significantly different from the size distribution based upon the surface and overburden soils. Generally, the size distribution for base flow conditions will be composed of smaller particle sizes. Sampling of the base flow size distribution is recommended to accurately design for base flow effluent limitations.

For sedimentation ponds which receive inflow by pumping, the sediment size distribution is very difficult to predict. An initial estimate of the size distribution can be developed from the overburden soil. Once the pond is operational, the effluent will have to be tested and pond modifications may be required.

3.2.2.2 Sediment Yield

Sediment yield of the mining area is required to determine the sediment storage volume of the pond and calculate the average effluent concentration for the design storm event. The required sediment storage volume is dependent upon the annual sediment yield and the frequency of sediment removal. It is left to the designer to decide how often the sediment will be removed from the pond. The annual sediment yield can be determined using the Universal Soil Loss Equation (USLE). There are several references which are available which describe the use of the USLE (OSM, 1982; Barfield, 1981).

Sediment yield for the design storm event must be determined so the average effluent concentration can be calculated. The Modified Universal Soil Loss Equation (MUSLE) can be used to calculate the sediment yield from the design storm event. The previously mentioned references also describe the use of MUSLE.

3.2.3 Inflow Suspended Solids Concentration

The inflow suspended solids concentration is required for both base flow conditions and the design runoff event. For base flow conditions, the influent suspended solids concentration will have to be measured since it is very difficult to predict.

For the design runoff event, the average influent suspended solids concentration can be computed knowing the storm runoff volume and sediment yield. The average influent suspended solids concentration is computed as:

$$C_I = \frac{Y}{\gamma V} \times 10^6 \qquad (3.1)$$

where, C_I = average influent suspended solids concentration (mg/l),

Y = storm sediment yield (lbs),

γ = unit weight of water (62.4 lb/ft^3), and

V = storm runoff volume (ft^3).

It should be recognized that this concentration is the average suspended solids concentration during the storm and higher suspended solids concentrations would be expected when the peak inflow rate occurs.

3.3 Effluent Limitations

Design procedures for sedimentation ponds developed in this manual are based on meeting solids effluent limitations. The operator should be aware that there are other effluent quality limitations on iron, manganese, and pH. It is assumed that the manual will be used for design of sedimentation ponds in the planning stages of mining and that the mining operation is controlled by New Source Performance Standards (NSPS). The NSPS solids effluent quality limitations are based on flow condition and the state of mining operation.

3.3.1 Suspended Solids Limitation

Solids effluent quality limitation during base flow for active surface mining, underground mining, and coal preparation areas is 35 mg/l total suspended solids (TSS) for the average of daily values for 30 consecutive days and a maximum of 70 mg/l TSS for any one day. For post-mining conditions, the discharge from underground mine drainage is also subject to these suspended solids limitations.

3.3.2 Settleable Solids Limitation

During any discharge or overflow resulting from a precipitation event less than or equal to the 10-year, 24-hour precipitation event, the discharge is subject to solids effluent quality limitations of 0.5 ml/l settleable solids (SS). During any discharge or overflow resulting from a precipitation event greater than the 10-year, 24-hour precipitation event the discharge is

not subject to a solids effluent quality limitation. These alternate limitations during precipitation events only apply if:

1. The treatment facility is designed, constructed, operated, and maintained to contain at a minimum the volume of water which would drain into the treatment facility from active mining areas and reclamation areas during the 10-year, 24-hour precipitation event (or snowmelt of equivalent volume);

2. The treatment facility is designed, constructed, operated, and maintained to consistently achieve the effluent limitations set by the regulatory agencies for all effluent quality limitations;

The volume of settleable solids in the effluent from a sedimentation pond is determined by a simple procedure known as the Imhoff cone test (see Figure 3.1). The Imhoff cones are filled to the one-liter mark with a thoroughly mixed sample. Settling is allowed to occur for 45 minutes, the sides of the cone are gently stirred with a rod to free any particles which may be clinging to the sides of the cone, and settling is allowed to occur for an additional 15 minutes. The volume of settleable solids in the cone is then recorded as milliliters per liter (from "Standard Methods for Examination of Water and Wastewater," 15th edition). The test is normally performed at room temperature 25°C, 77°F) or the results are adjusted to room temperature. It should be pointed out that some difficulty exists in reading the Imhoff cones. When dealing with fine particles such as silt, it requires practice in defining the volume of settleable solids. It is recommended that these readings be taken in the presence of persons who have experience in performing the Imhoff cone test.

Particle sizes smaller than one micron (0.001 mm) are assumed non-settleable under gravitational forces alone. Therefore, particle sizes smaller than one micron are not considered settleable solids in this manual.

A well-designed sedimentation pond will remove practically all of the sand-sized particles. Therefore, the settled volume in the bottom of the Imhoff cone will be composed primarily of silt.

The smallest particle which will settle through the entire height of the Imhoff cone during the test can be computed. Based upon Stoke's Law, test conditions, and assuming a specific gravity of the particle to be 2.65, this particle size is computed as 0.011 mm (d_o). Stokes's Law is based upon ideal settling and there are several references available which discuss Stoke's Law

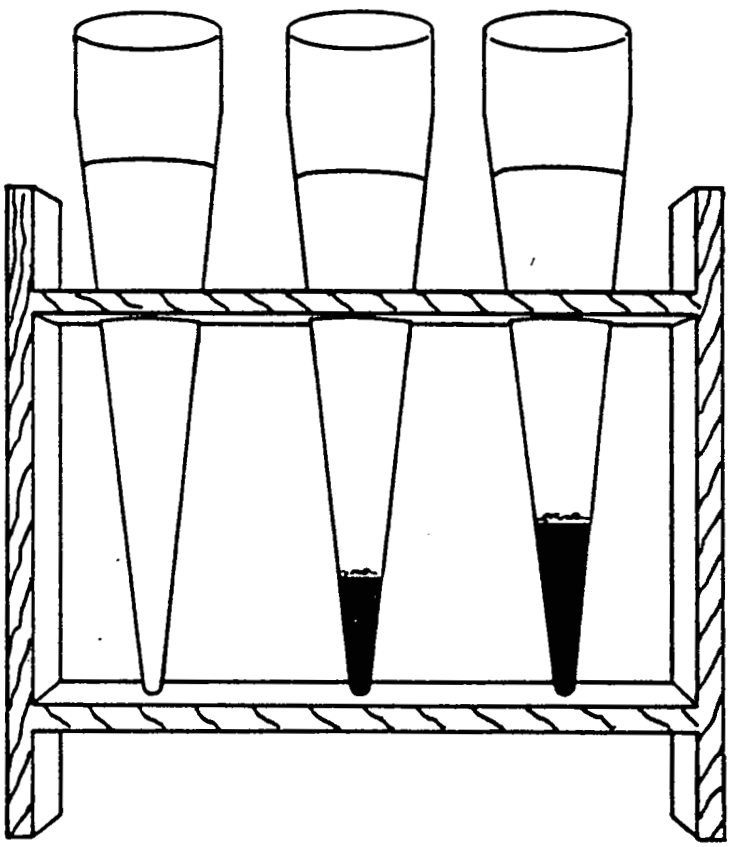

FIGURE 3.1 IMHOFF CONE TEST APPARATUS (SAWYER, 1978)

(Barfield, 1981; Shames, 1962). All particles larger than 0.011 mm would settle during the test. Only a percentage of the particles smaller than 0.011 mm would be expected to settle depending upon the concentration of each particle size within the sample. The objective of this design manual is to select a particle size of a particular size distribution that must be removed so that the settleable solids concentration meets effluent limitations when the sample is placed in the Imhoff cone.

3.4 Trapping Efficiency

To meet effluent limitations, sedimentation pond design must be based on sediment size distribution and TSS concentration of the base flow or design storm runoff entering the pond. Based on present state of the art, the most common method for developing the pond design criteria to meet a specified effluent limitation is by determining the percent of sediment removal required. The percent of sediment removal is called the trapping efficiency (E) and is equal to the weight of sediment flowing into the pond minus the weight of sediment leaving the pond divided by the weight of sediment flowing into the pond and then multiplied by 100 to obtain efficiency in percent. Thus, the trapping efficiency is given by:

$$E = \frac{W_I - W_O}{W_I} \times 100 \qquad (3.2)$$

where, W_I = weight of sediment flowing into the pond,

W_O = weight of sediment flowing out of the pond,

During base flow, the sedimentation pond will be in a steady-state condition where the water inflow volume equals the water outflow volume. The water volume can be changed to a weight of water. Dividing the weight of sediment by the weight of water will yield a concentration of TSS. Therefore, the trapping efficiency becomes

$$E = \frac{C_I - C_O}{C_I} \times 100 \qquad (3.3)$$

where, C_I = average sediment concentration into the pond,

C_O = average sediment concentration out of the pond.

For base flow, effluent limitations are stated as a concentration of TSS. Therefore, a relationship between the influent TSS concentration and the trapping efficiency can be developed if the effluent TSS concentration is known. Once the influent TSS concentration has been measured, the required trapping efficiency can be determined if the effluent TSS concentration is known. Figure 3.2 presents this relationship for a range of effluent concentration limitations. Knowing the influent TSS concentration, the required trapping efficiency to limit the effluent concentration to a standard can be determined from Figure 3.2.

During the design precipitation runoff event, the development of pond design criteria is more difficult. The condition during a storm runoff is dynamic in that the inflow to the pond is represented by a runoff hydrograph; the outflow is based on the water surface elevation in the pond and the discharge capacity of the outflow device. In addition, effluent limitations for the design precipitation runoff event are stated as a concentration of settleable sediment.

To design for the design runoff event requires that a practical approach be taken. The method used to route the inflow hydrograph through the sedimentation pond is based upon the inflow volume being equal to the outflow volume. (Water routing is discussed in Section 3.6.) Therefore, the trapping efficiency for the design runoff event can also be computed using Equation 3.3. However, for the design runoff event, the suspended solids concentration and the trapping efficiency are both unknown.

By definition, the trapping efficiency is the weight of sediment removed in the pond. The influent sediment is represented by the sediment concentration and size distribution. In addition, it is assumed that the influent sediment is evenly distributed in the water inflow. Therefore, when a sedimentation pond is designed to remove a certain particle size (d_i), the percent of sediment removal or trapping efficiency is equal to the percent of the size distribution that is larger than d_i. Figure 3.3 presents the definition of the trapping efficiency for various particle sizes. This estimate of trapping efficiency is conservative since it assumes none of the particles

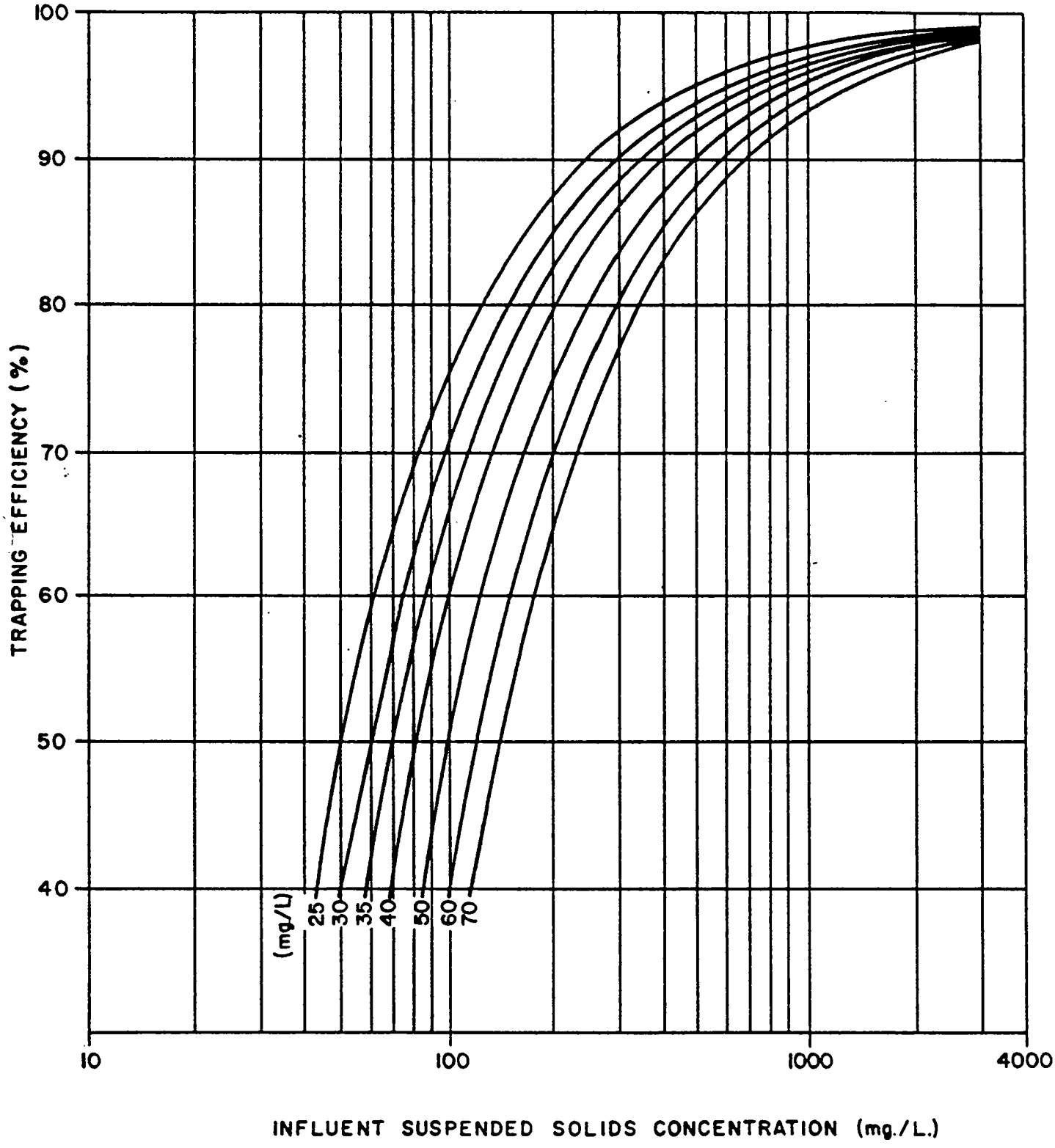

FIGURE 3.2 REQUIRED TRAPPING EFFICIENCY TO MEET VARIOUS EFFLUENT LIMITATIONS

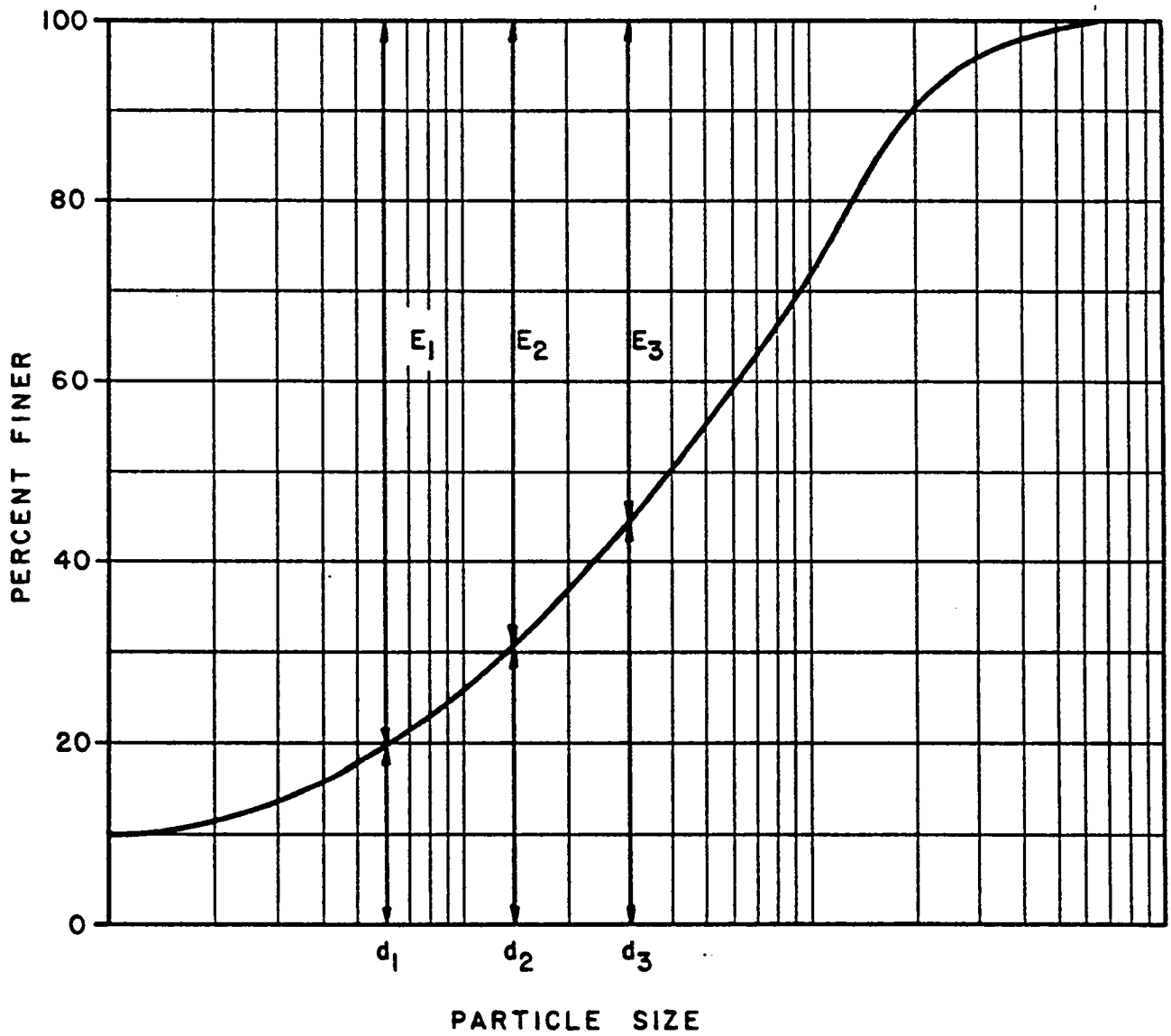

FIGURE 3.3 DEFINITION OF TRAPPING EFFICIENCY FOR VARIOUS PARTICLE SIZES

smaller than the selected particle size (d_i) will settle in the pond. Actually, a percentage of the particles smaller than d_i will settle. Therefore, for each particle size, a trapping efficiency can be determined from the influent size distribution, and the suspended solids concentration can be calculated by rearranging Equation 3.3.

$$C_O = (1 - \frac{E}{100})\ C_I \tag{3.4}$$

To determine whether the effluent requirements are satisfied, a relationship between the suspended solids concentration and the settleable solids concentration is required. This relationship is presented in the following section.

3.5 Settleable Solids Concentration

Effluent limitations during runoff events and post-mining reclamation are stated in terms of a volume of settleable solids per one liter of sample. To relate the settleable solids limitation to the design of sedimentation ponds, a relationship between settleable solids and total suspended solids must be considered. Settleable solids are defined as the volume of particles that settle in the bottom of an Imhoff cone in one hour of quiescent settling.

Knowing the influent sediment size distribution, a particle size to be settled in the pond is selected and the settleable solids concentration is determined. If the settleable solids concentration is larger than effluent limitations, a smaller particle size is selected and a new settleable solids concentration is computed. Likewise, if the settleable solids concentration is smaller than the effluent limitations, a larger particle size is selected and the new settleable solids concentration is computed. Therefore, an interative process is required to determine the particle size that the sedimentation pond must remove so the pond effluent satisfies the settleable solids limitation.

The first step in computing the settleable solids concentration is to adjust the influent sediment size distribution by subtracting out the non-settleable sizes (< 0.001 mm). Given the size distribution in Figure 3.4, it can be seen that ten percent of the sediment is smaller than 0.001 mm. Therefore, the 90 percent of the size distribution which is settleable must be

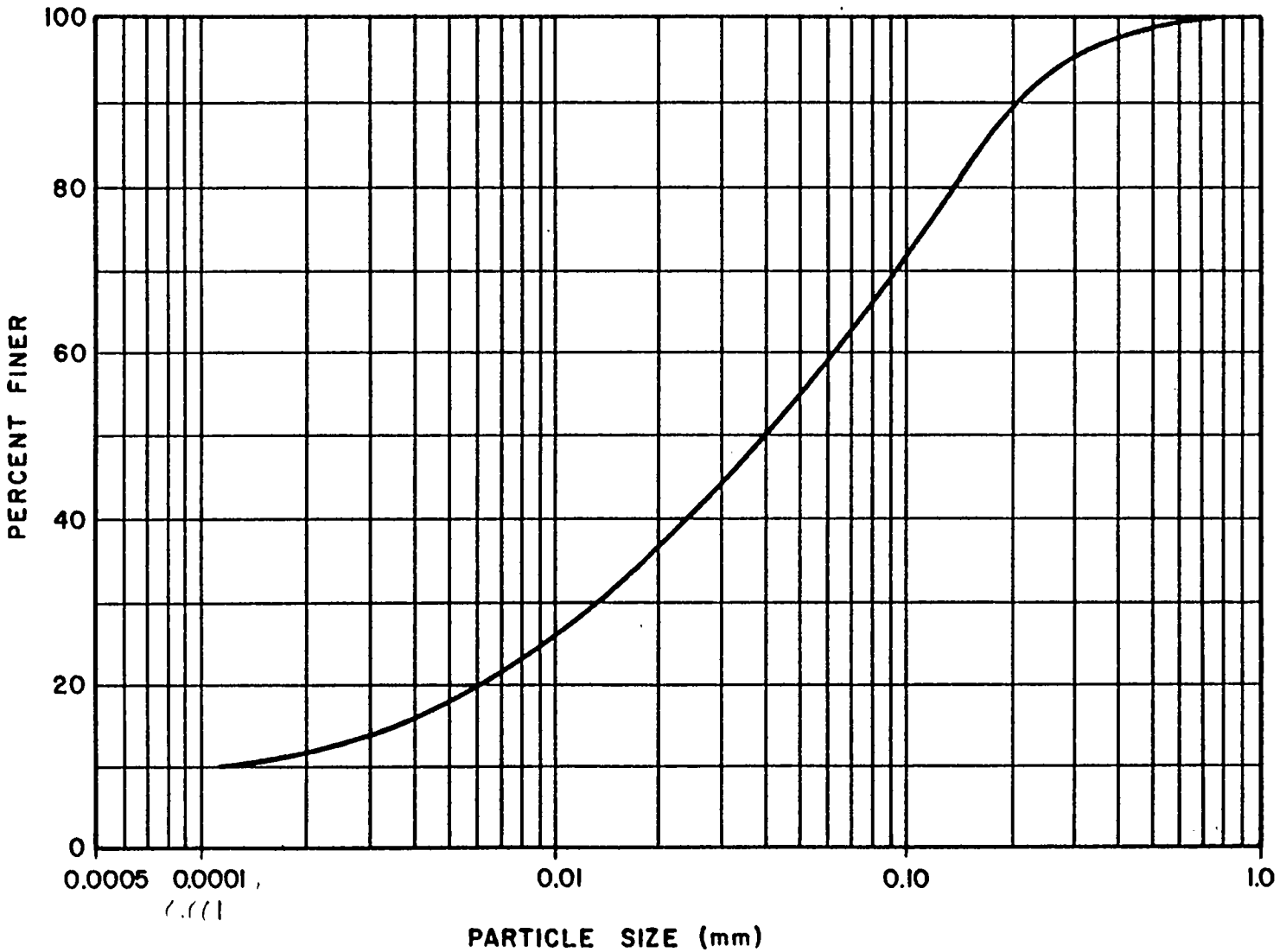

FIGURE 3.4 INFLUENT SEDIMENT SIZE DISTRIBUTION

redistributed so that it makes up 100 percent of the size distribution. Table 3.2 shows how to develop a size distribution in which all particle sizes are settleable. The settleable size distribution is presented in Figure 3.5.

A relationship between the effluent suspended solids concentration, the settleable particle size distribution, and the settleable solids concentration is required. Barfield (1981) developed an equation for the conversion of suspended solids concentration to settleable solids based on discrete particle settling and the geometry of the Imhoff cone. The volume of settleable solids is given by

$$SS = \frac{C^*}{W} \left[(1 - X_o) + \sum_{i=1}^{X_o} \left(\frac{d_i}{d_o}\right)^6 \Delta X_i\right] \qquad (3.5)$$

where, SS = settleable solids concentration (mg/l),

C^* = average effluent suspended solids concentration for the settleable sizes (mg/l),

W = dry bulk density of the settled solids (mg/ml),

X_o = fraction of particles in the effluent distribution smaller than d_o = 0.011 mm,

d_o = smallest particle which will settle through the entire height of an Imhoff cone (0.011 mm),

d_i = mean particle size of the interval ΔX_i (mm), and

ΔX_i = fraction of effluent sediment size distribution which has a mean particle size of d_i.

The average effluent suspended solids concentration for the settleable sizes is given as

$$C^*_o = (1 - E)\, C_I = (1 - E)\, \frac{kY}{\gamma V} \times 10 \qquad (3.6)$$

where, E, γ V, Y are as defined previously, and

k = fraction of the particles in the influent size distribution which are settleable.

In the previous example, k would equal 0.90 since 90 percent of the influent size distribution is settleable.

Table 3.2. Development of Settleable Solids Size Distribution.

Particle Size (mm) (1)	Influent Distribution (% finer) (2)	Column 2 - 10 (3)	Settleable Solids Size Distribution Column 3 x (100/90) (% finer) (4)
0.001	10	0	0.0
0.0042	16	6	6.7
0.01	26	16	17.8
0.04	50	40	44.4
0.10	72	62	68.9
0.20	90	80	88.9
0.66	100	90	100.0

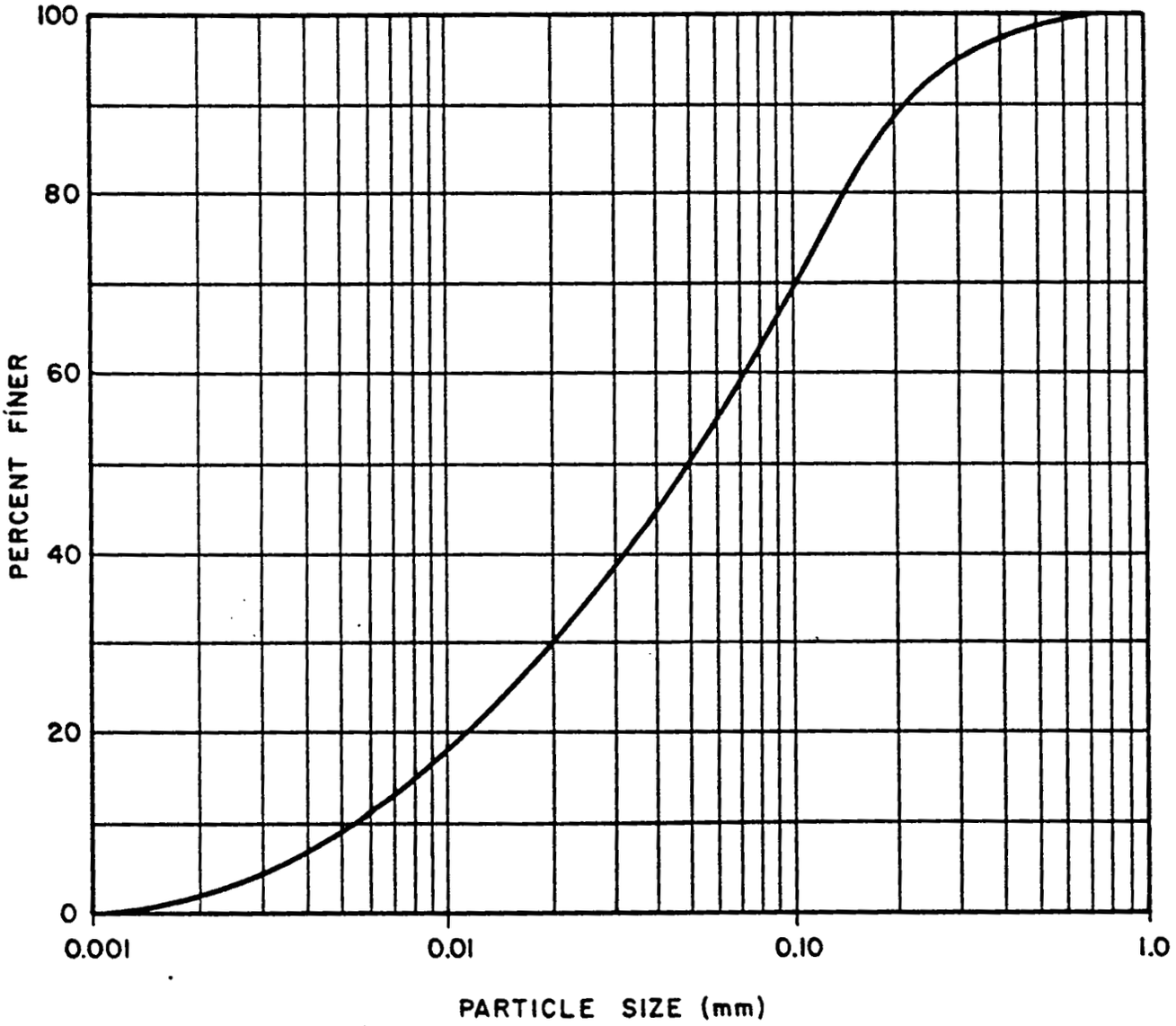

FIGURE 3.5 SETTLEABLE SOLIDS SIZE DISTRIBUTION

The dry bulk density of the settled solids (W) should be representative of settled silt since this is the size range that will settle during the Imhoff cone test. A representative value of W for settled silt is 70 lb/ft^3 or approximately 1120 mg/l.

The fraction of the particles in the effluent size distribution which are smaller than d_o (0.011 mm) is denoted as X_o. When a particle size to be removed in a pond is equal to or smaller than 0.011 mm, X_o will always be 1.0 and all of the particle sizes in the effluent are equal to or smaller than 0.011mm. All of the particle sizes which have a diameter of 0.011 mm or larger will settle in an Imhoff cone test. The second term in Equation 3.5 determines what percent of the particle sizes smaller than 0.011 will settle during the test.

When a particle size to be removed in the pond is larger than 0.011 mm, X_o is equal to the percent of the effluent size distribution which is smaller than 0.011 mm. For this condition, the effluent will contain particle sizes greater than 0.011 mm. All particle sizes greater than 0.011 mm will settle in the Imhoff cone during the test. The first term in Equation 3.5 describes the percent of the effluent size distribution which is larger than 0.011 mm and therefore, will settle during the Imhoff cone test. For this condition, X_o can be completed as

$$X_o = \frac{\text{\% of settleable size distribution smaller than 0.011 mm}}{\text{\% of settleable size distribution smaller than size to be removed in sedimentation pond}}$$

The design of a sedimentation pond to meet effluent limitations requires that a particle size to be removed be selected. A good starting point is to select a particle size of 0.011 mm. This makes X_o in Equation 3.5 equal to 1.0. Therefore, the effluent size distribution is made up of particles smaller than 0.011 mm. To evaluate the second term in Equation 3.5, the particle sizes smaller than 0.011 mm must be redistributed into a size distribution in which the particle sizes smaller than 0.011 mm comprise the entire size distribution. Using the settleable size distribution presented in Figure 3.5, it can be seen that 19.5 percent of the settleable size distribution is smaller than 0.011 mm. This percentage of the settleable size distribution is then redistributed to be 100 percent.

This procedure starts by breaking up the settleable size distribution smaller than 0.011 mm into several percentage intervals. This is shown in Figure 3.6. The size range for each increment is then tabulated and the mean size (d_i) is determined. This procedure is shown in Table 3.3. In this example, percentage increments of 0.04 were chosen. There is no set value for the percent increments. However, smaller sized increments will yield a better result. The particle size range for each increment is then tabulated (column 1, Table 3.3). The particle size (d_i) in the middle of each increment is then tabulated in column 2 of Table 3.3 as mean size. The final step is to redistribute the size distribution smaller than 0.011 mm. This is accomplished by dividing each percent increment (column 3) by the sum of column 3. For this example, the first four entries in column 4 are found by dividing 0.04 by 0.195. Column 4 is the ΔX_i value used in Equation 3.5 corresponding to the d_i value (column 2). Knowing this information, the settleable solids concentration in the effluent can be determined from Equation 3.5.

If the settleable solids effluent limitations are not satisfied, a particle size smaller than 0.011 mm is chosen to be removed. The value of X_o in Equation 3.5 will still be equal to 1.0. However, the particle size range in column 1, Table 3.3 will change. The particle size range will now have the upper limit of the selected particle size instead of 0.011 mm. Therefore, the trapping efficiency, effleunt concentration, particle size range, increment size, and ΔX_i will have new values and the new settleable solids concentration can be computed.

When the computed settleable solids concentration is less than the effluent limitations, larger sized particles will be allowed in the effluent. Therefore, a particle size larger than 0.011 mm is selected to be removed in the pond. In Equation 3.5, the second term will remain the same as that which was computed for a particle size of 0.011 mm but will be reduced by a factor of X_o. This is one of the main reasons for selecting 0.011 mm as a starting point. The value of X_o will no longer be equal to 1.0. For this condition, X_o can be computed as defined previously. With the new trapping efficiency, effluent concentration, and value of X_o, the settleable solids concentration can be computed using Equation 3.5. The settleable solids concentration will increase rapidly as the particle size to be removed in the pond is increased

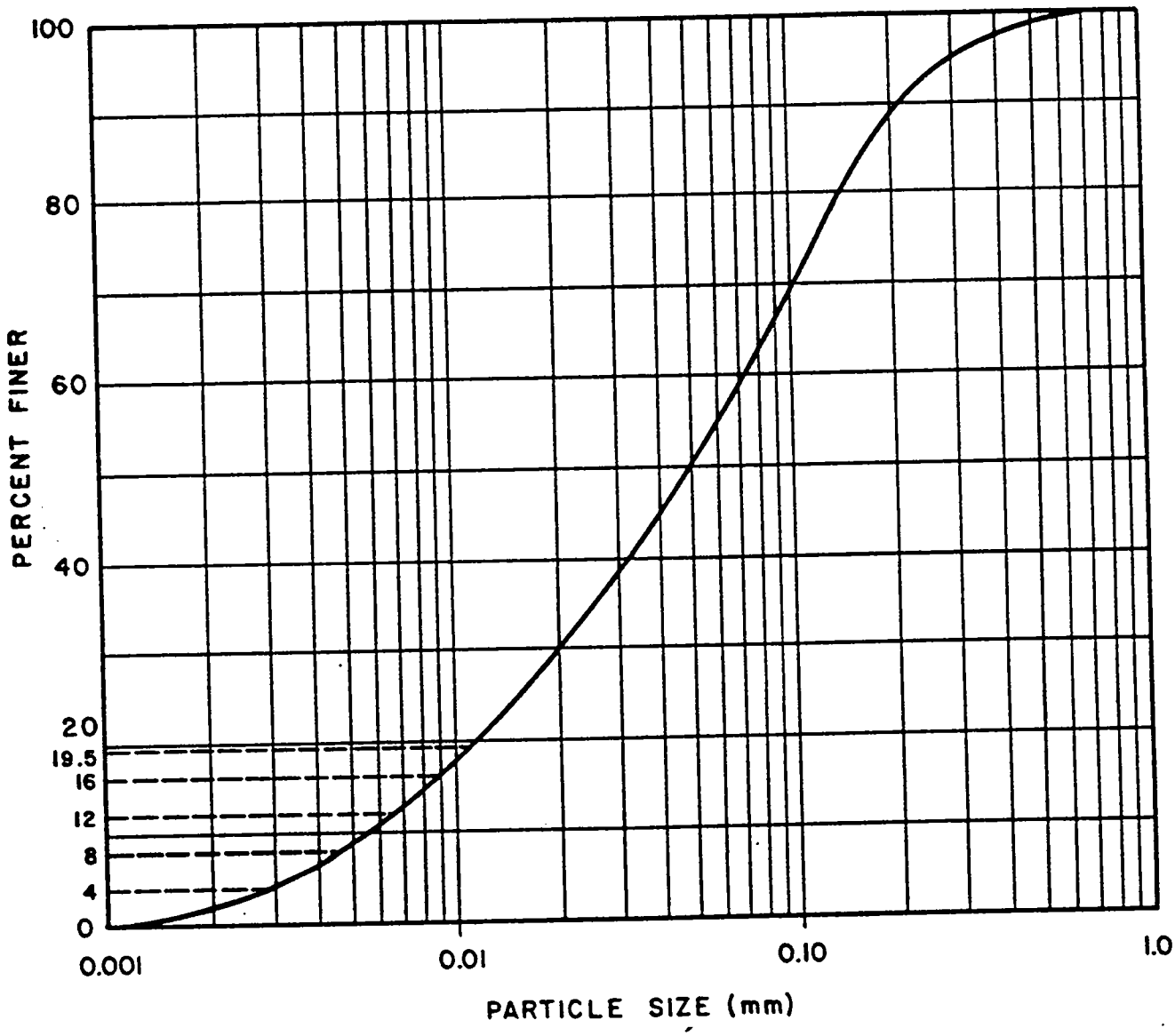

FIGURE 3.6 DEFINITION OF PERCENTAGE INTERVALS

Table 3.3. Size Distribution for Particles Smaller than 0.011 mm.

(1) Particle Size Range	(2) Mean Size (d_i)	(3) Percent in Size Range of Settleable Size Distribution (X_i)	(4) $\Delta X_i = (X_i/\Sigma X_i)$
0.001 - 0.0023	0.0015	0.04	0.205
0.0023 - 0.0046	0.0035	0.04	0.205
0.0046 - 0.0064	0.0054	0.04	0.205
0.0064 - 0.0088	0.0075	0.04	0.205
0.0088 - 0.011	0.0100	0.035	0.180
Σ		0.195	1.0

since all particles larger than 0.011 mm will settle in an Imhoff cone. Therefore, when a new particle size is selected, a particle size in the range of 0.015 mm to 0.02 mm should be tried so the designer can understand how fast the settleable solids concentration increases.

When the designer has calculated the particle size which must be removed in the sedimentation pond to meet effluent limitations, criteria for the sedimentation pond design can be determined. The determination of the design particle size to meet effluent limitations may seem confusing. Following through the example given in Chapter VI will help the operator understand how to design a sedimentation pond to satisfy settleable solids effluent limitations.

3.6 Storage Volume Requirement

In the design process, there is an iteration procedure that is required between the information presented in Sections 3.6, 3.7 and 3.8. Knowing the particle size to be removed (Section 3.5), a depth is assumed and the corresponding required detention time is determined (Section 3.8). The available storage volume for the selected depth is determined (Section 3.7). The required storage volume is then determined (Section 3.6) and compared to the available storage volume. If the available storage volume is less than the required storage volume, the depth is increased and the interation is repeated. When the available storage volume is greater than the required storage volume, the depth, detention time, storage volume, and outflow rate are established. The pond surface area, length, and width are then checked to ensure that the selected particle size is settled in the pond.

Flow routing through a sedimentation pond is determined by the rate of inflow, storage capacity of the pond, and outflow capacity for given reservoir levels. Numerous methods of reservoir routing have been developed which include the Modified Puls Method, Rippl Mass Curve, and several others. Descriptions of these methods can be found in hydrology texts and manuals.

A simplified method is used in this manual. The simplified routing method is used to determine the required storage volume and size the principal spillway to produce the required detention time so that effluent requirements are met. The simplified routing procedure requires that the peak inflow rate and runoff volume are known. The peak inflow rate and runoff volume can be determined from the inflow hydrograph. This method implies two assumptions,

the shape of the inflow and outflow hydrographs are triangular and the initial water surface elevation is at the elevation of the principal spillway crest. Therefore, the areas under the inflow and outflow hydrographs are equal.

Water routing through sedimentation ponds can be solved using Figures 3.7 and 3.8. Figure 3.7 is a graph showing the relationship between the time base of the inflow hydrograph (T_b) and the ratio of the required storage volume (S) to the runoff volume (V) for a range of detention times. Figure 3.8 presents the relationship between T_b and the ratio of the peak outflow rate (Q_O) to the peak inflow rate (Q_I) for a range of detention times. The time base of the inflow hydrograph is determined as:

$$T_b = \frac{V}{1800\ Q_I} \tag{3.7}$$

where, T_b = time base of inflow hydrograph (hours),

V = water runoff volume (ft^3),

Q_I = peak inflow rate (cfs).

The time base can be computed based on the information from the inflow hydrograph. Knowing the time base of the inflow hydrograph and the required detention time for a selected particle size to be settled (Section 3.8.1), the required storage volume and peak outflow rate can be determined using Figures 3.7 and 3.8.

3.7 Available Storage Volume

The sedimentation pond storage volume should provide an adequate sediment storage volume and an adequate detention storage volume so effluent limitations are satisfied. At each sedimentation pond site, a relationship between the depth and the storage volume is required since the trapping efficiency depends on depth and storage volume of the pond.

The method utilized to develop the depth and storage volume relationship requires a topographic map of the location of the pool area and embankment of the sedimentation pond. An incremental value of storage volume between two pool elevations can be determined using a planimeter and the scaled topography map. For example, in Figure 3.9 the incremental storage volume between a pool at elevation E_2 and a pool at elevation E_3 is determined by measuring (with a

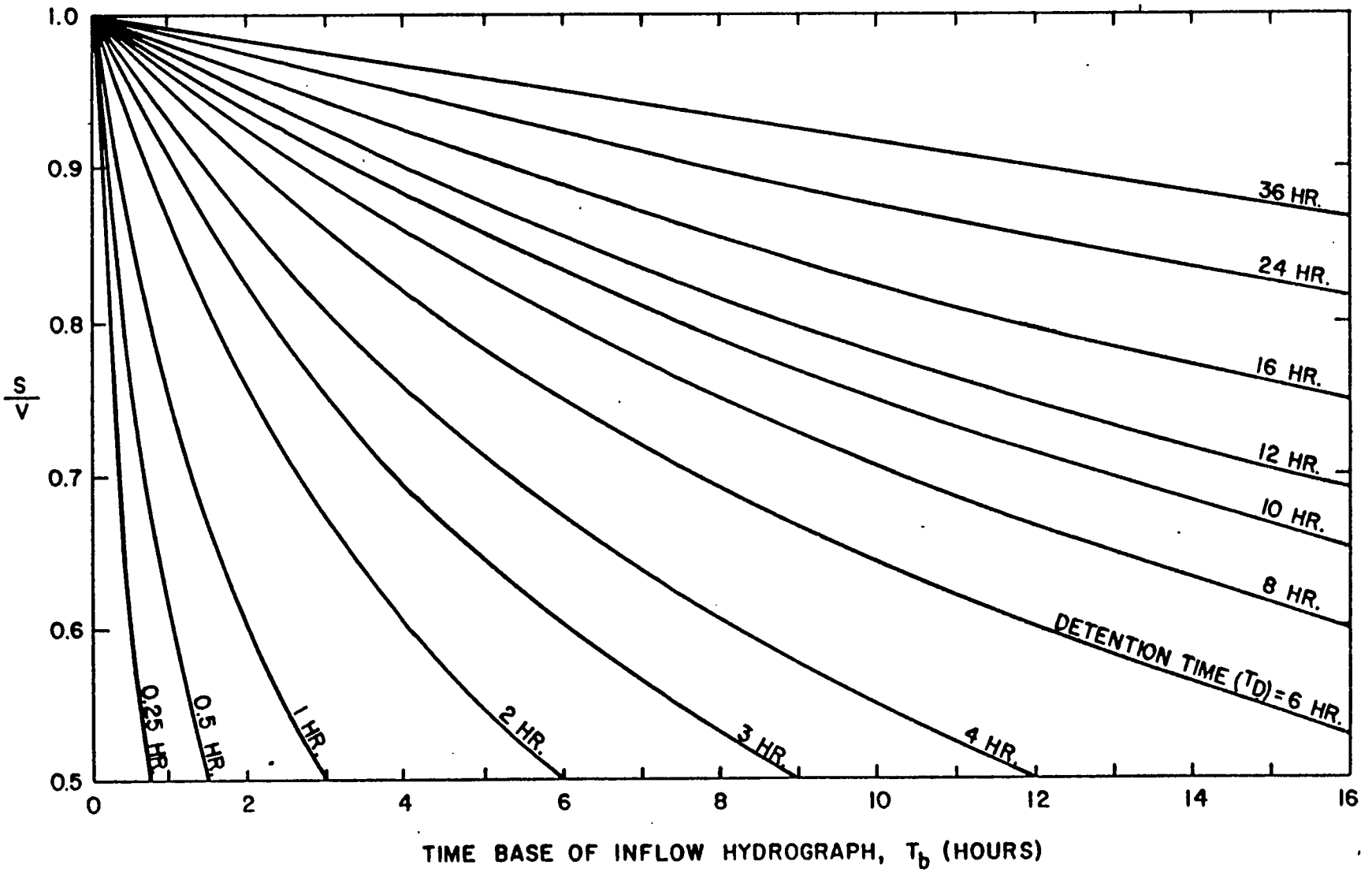

FIGURE 3.7 WATER ROUTING CURVE, S/V VERSUS T_b
(WARD, HAAN, TAPP, 1979)

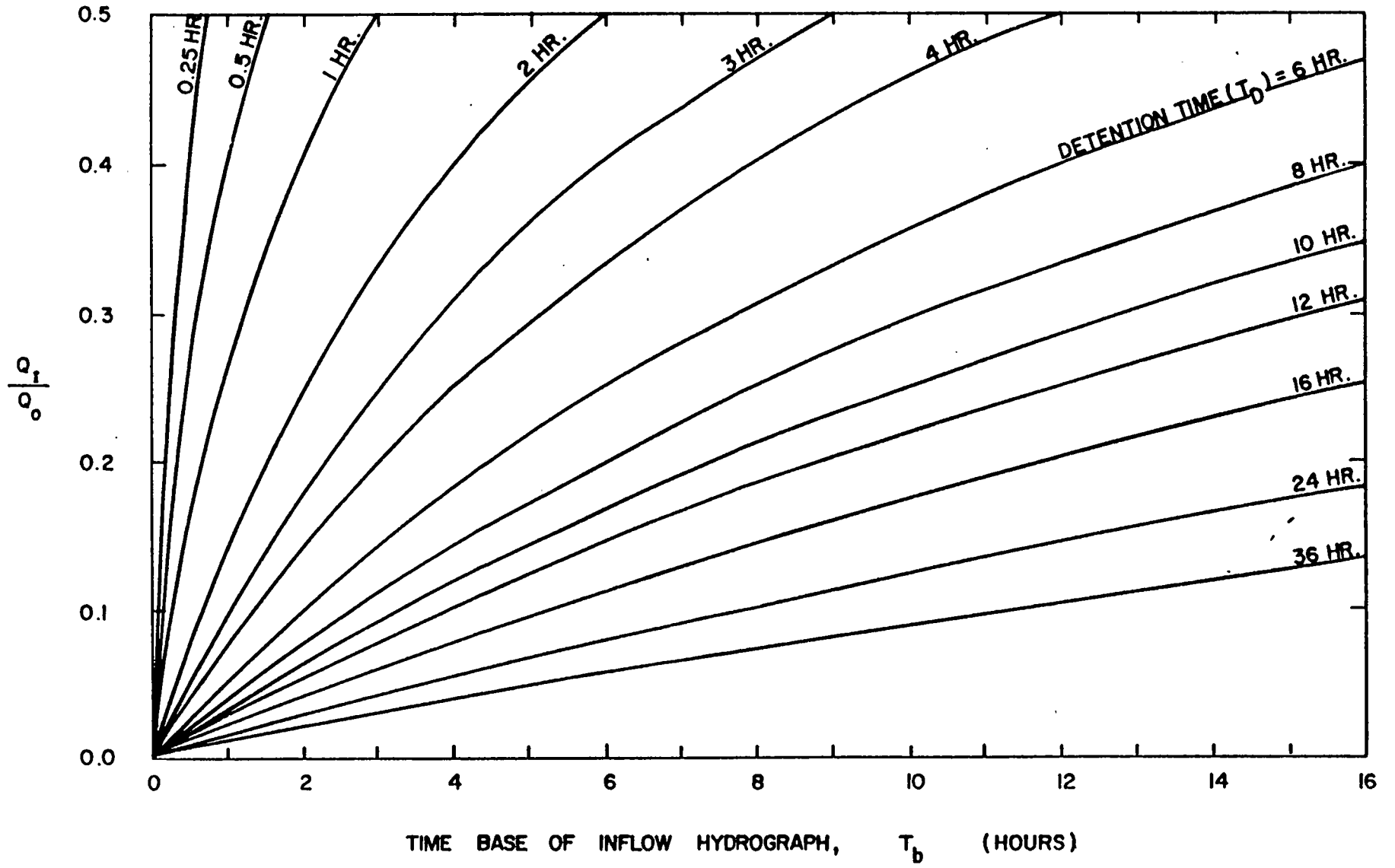

FIGURE 3.8 WATER ROUTING CURVE, Q_I/Q_O VERSUS T_b
(WARD, HAAN, TAPP, 1979)

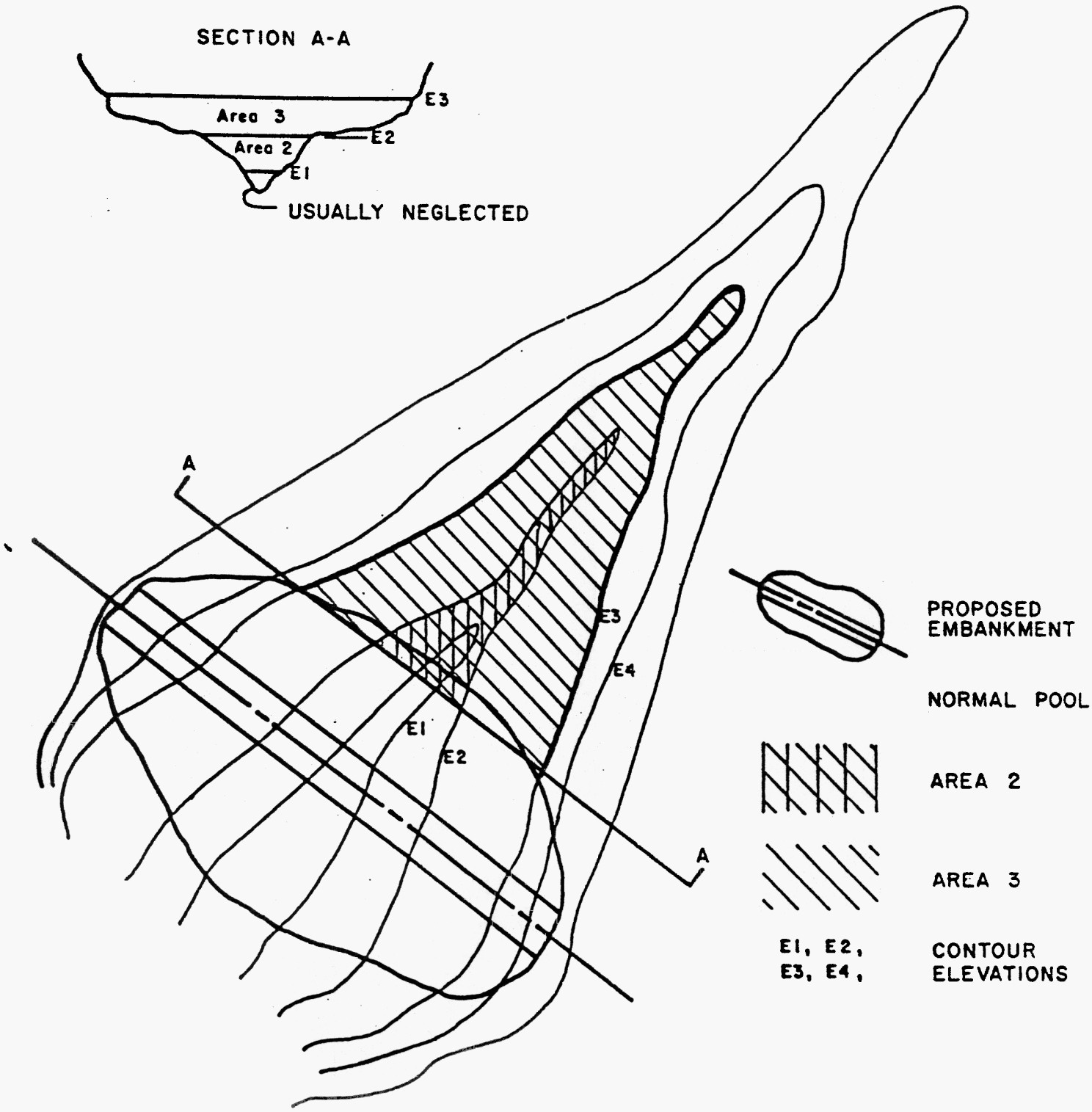

FIGURE 3.9 DEFINITION SKETCH TO DETERMINE INCREMENTAL STORAGE VOLUME

planimeter) the pool surface area at elevations E_2 and E_3. The incremental storage volume is then calculated as the increase in elevation ($E_3 - E_2$) times the average surface area of the pool [($A_{E_2} + A_{E_3}$)/2]. Thus, a table relating storage to stage can be developed (see Table 3.4). A graph of the stage versus storage volume is then plotted.

It is left to the designer to decide how often sediment will be removed from the pond. The sediment yield during the time period between sediment removal can be computed using procedures described in Section 3.2.2.2. The sediment yield is converted to a storage volume by dividing the yield by the unit weight of the deposited sediment. Lara and Pemberton (1963) developed an equation to calculate the unit weight of the settled sediment based upon sediment size distribution and type of reservoir operation. This equation appears in several references (Barfield, 1981; Bureau of Reclamation, 1977) and the designer may consult these to compute the unit weight of the settled sediment. A unit weight of 70 lbs/ft^3 is suggested to simplify the design. Using this value of unit weight, the required sediment storage volume can be computed. The corresponding depth of the sediment in the pond can be found from the stage-storage curve.

The characteristics of sediment deposition are such that the large sized particles will settle near the inlet of the pond resulting in the formation of a delta. Delta formation is described in Section 3.8.2.2. Because the larger sized particles settle near the inlet, the sediment storage volume should be provided near the inlet of the pond. If the sediment storage volume is not provided at this location, accumulated sediment at the inlet will require frequent removal.

The detention storage volume is the storage volume required to produce the required detention time. This is the volume that is used in the water routing procedure presented in Section 3.6. The detention storage volume is determined from the stage-storage curve and is measured as the available storage volume above the elevation of the principal spillway crest. The elevation of the principal spillway crest is usually chosen as the maximum depth of the sediment storage volume unless a permanent pool is provided. When a permanent pool is provided, the permanent pool elevation will be at the elevation of the principal spillway crest.

Table 3.4. Stage-Storage Relationship Development.

Stage (feet)	Storage ($feet^3$)
E_1	0
E_2	$[(E_2 - E_1)\ (\frac{A_{E_1} + A_{E_2}}{2})] = S_2$
E_3	$S_2 + [(E_3 - E_2)\ (\frac{A_{E_2} + A_{E_3}}{2})] = S_3$
E_4	$S_3 + [(E_4 - E_3)\ (\frac{A_{E_3} + A_{E_4}}{2})] = S_4$

3.8 Sedimentation Pond Configuration

The design of the sedimentation pond configuration is based upon ideal settling conditions. In actual field situations, ideal settling conditions are often difficult to reproduce. This necessitates the need to incorporate factors into the design which account for nonideal settling conditions. The following sections discuss the design of the pond configuration based upon ideal settling, factors which produce nonideal settling, and what factors are used to compensate for nonideal settling conditions.

3.8.1 Ideal Settling

Based upon ideal settling conditions, there is a direct relationship between the detention storage depth of the pond and the detention time. This relationship can be expressed as

$$V_s = \frac{D}{3600\ T_D} \tag{3.8}$$

where, V_s = particle settling velocity (fps),

D = detention storage depth (ft), and

T_D = detention time (hours).

The particle settling velocity is defined by Stoke's Law and is dependent upon temperature of the water, particle size, and specific gravity of the particle. To determine the design particle size as presented in Section 3.5, the temperature of the water was assumed 77° F, since this is part of the Imhoff cone test and sets the criteria which must be satisfied. In the field, the temperature of the water runoff will be closer to 50° F. For the same particle size, settling will take longer in the water which is 50° F than in the water which is 77° F. Therefore, design of the sedimentation pond is based upon the water being 50° F. Assuming a water temperature of 50° F and the specific gravity of the particle to be 2.65, Stoke's Law may be written as

$$V_s = 2.254\ d^2 \tag{3.9}$$

where, V_s = particle settling velocity (fps) and

d = particle diameter (mm).

The result of combining Equations 3.8 and 3.9 is

$$2.254\ d^2 = \frac{D}{3600\ T_D} \tag{3.10}$$

Figure 3.10 presents the relationship between the particle diameter and detention time for various depths using Equation 3.10. To settle any size particle, the required detention time for various depths can be found from Figure 3.10 or computed by Equation 3.10.

There is also a direct relationship between the flow length of the pond and the detention time. This relationship is represented as

$$V_H = \frac{L}{3600\ T_D} \tag{3.11}$$

where, V_H = horizontal flow velocity through the pond (fps),

L = flow length of the pond (ft), and

T_D = detention time (hours).

The horizontal flow velocity through the pond can be computed as

$$V_H = \frac{Q_o}{WD_1} \tag{3.12}$$

where, Q_o = peak outflow rate (cfs),

W = average width of the pond (ft), and

D_1 = total depth of the pond (ft).

Combining Equations 3.11 and 3.12 results in

$$L = \frac{3600\ T_{D_1} Q_o}{WD_1} \tag{3.13}$$

where, T_D, Q_o, W are as defined in Equation 3.11 and

D_1 = sediment storage depth plus detention storage depth, and

T_{D_1} = detention time for depth D_1 from Equation 3.10.

Equation 3.13 gives the required flow length of the pond to settle the design particle size. This equation is used as a check after the pond storage volume

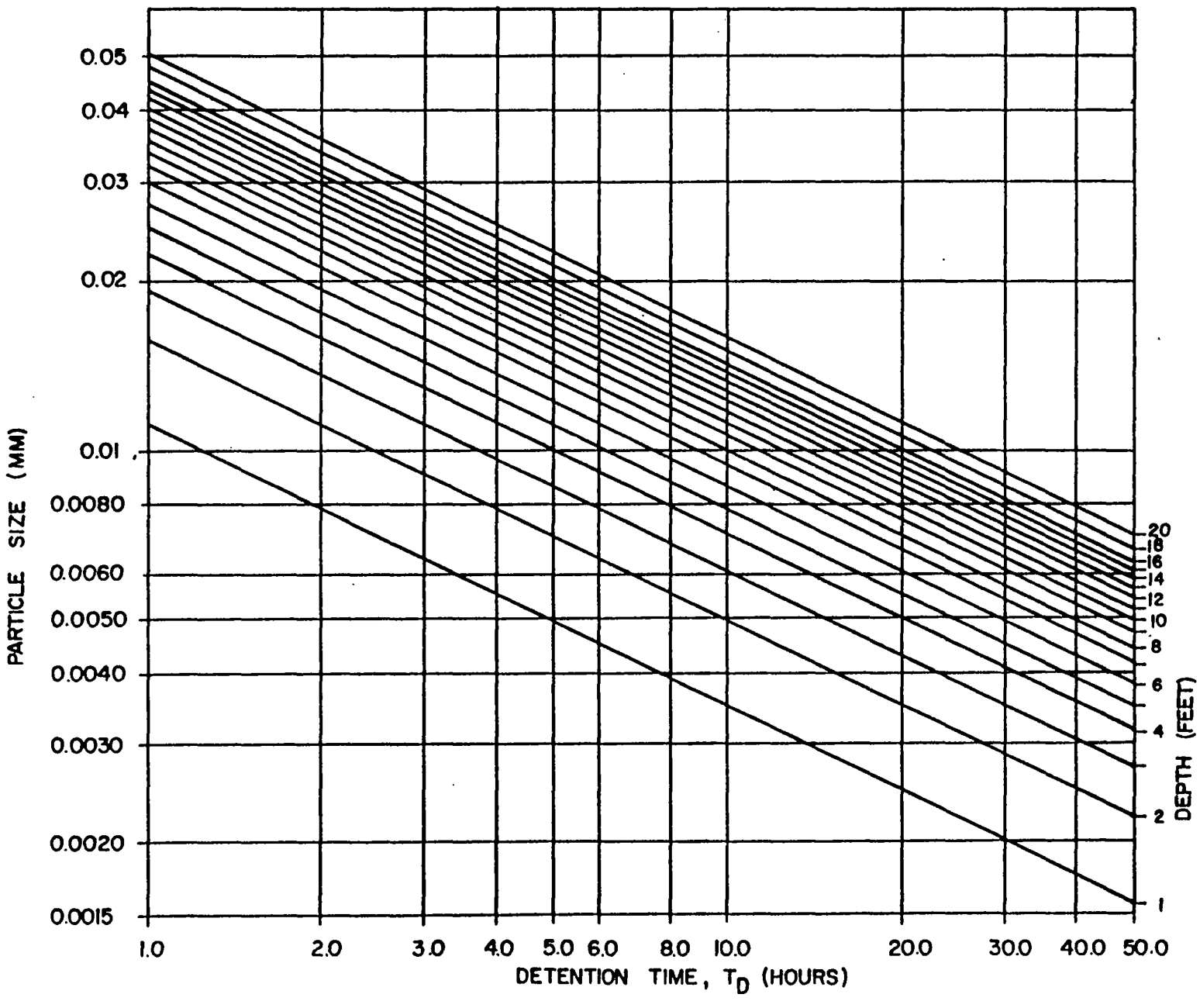

FIGURE 3.10 PARTICLE SIZE VERSUS DETENTION TIME FOR VARIOUS DEPTHS

and outflow rate have been established. The total depth is used in Equation 3.13 since the particle will be required to settle this depth just after the pond construction is completed. If the required flow length cannot be achieved, measures described in Section 4.2 can be taken to increase the flow length of the pond.

3.8.2 Nonideal Settling

As presented so far, the design of sedimentation ponds have been based on ideal settling conditions. However, in the field it is difficult and often impossible to provide ideal settling conditions. Variations from ideal settling are caused by several factors. These factors are not independent conditions; they are all interrelated and cause deviations from ideal settling reducing the efficiency of the sedimentation pond. The conditions causing variation form ideal settling are:

- Flow currents within the pond
- Reservoir deposition
- Short circuiting and turbulence
- Scour and resuspension

3.8.2.1 Flow Currents

Various types of flow currents can exist within sedimentation ponds. The most common being those caused by wind blowing over the surface of the pond. Convection currents can also exist due to significant differences of temperature within the pond.

Often during storm runoff events, the inflow to the pond is typically more dense due to high suspended solids concentrations. This results in a density current that flows along the bottom of the pond. This localized increase in flow can cause scour and resuspension of settled solids and significantly reduce the trap efficiency if the outlet to the pond is located near the bottom.

All types of currents transport suspended material throughout the pond both vertically and horizontally and distort the flow pattern from that assumed under ideal settling. The result is a reduction in the performance of the pond.

3.8.2.2 Delta Formation

As the sediment-laden inflow passes from the inlet channel to the sedimentation pond, the forward velcotiy of the flow is reduced due to increase in flow width and flow depth. This results in the larger sized particles being deposited almost immediately as flow enters the sedimentation pond. Deposition of the larger sized particles near the inlet of the pond will result in the formation of a delta. Figure 3.11 shows a delta formation near the inlet of the pond. The delta will continue to grow larger and will gradually migrate downstream within the pond. The consequence of a delta formation is reduced detention time. Therefore, small particle sizes are not given enough time to settle to the bottom of the pond.

3.8.2.3 Short Circuiting and Turbulence

Short circuiting is the flow of water through a sedimentation pond directly from the inlet to the outlet resulting in dead storage areas and reduced detention times. Figure 3.12 presents some typical sedimentation pond shapes which have short circuiting. Short circuiting and turbulence are caused by flow currents (as previously discussed), high inlet velocities, high outlet flow rates, sedimentation pond geometry, and improper location of inlets and outlets. When short circuiting occurs, the effective width of the flow area through the pond is reduced and the flow velocity through the pond is greater. This effect reduces the settling characteristics and increases potential for scour and resuspension of settled sediments.

3.8.2.4 Scour and Resuspension

Scour and resuspension is caused by density currents and high flow rates through the sedimentation pond. The scour velocity is defined as that velocity of flow required to initiate motion of a discrete particle. Resuspension of the design particle size will result in effluent limitations not being satisfied.

3.8.3 Control of Nonideal Settling

The significant factors which affect ideal settling are short circuiting, turbulence, and scouring of the settling sediment. In the following sections criteria areset to minimize these effects. These criteria are length-to-width

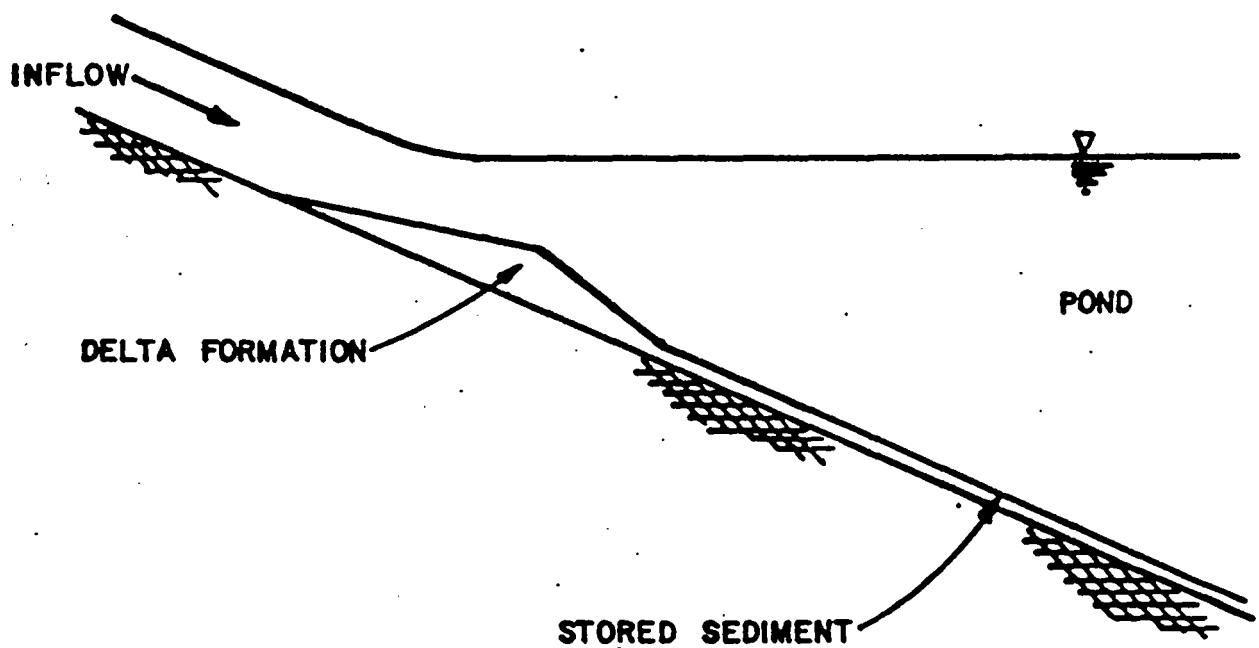

FIGURE 3.11 SCHEMATIC OF DELTA FORMATION
(AFTER GRAF, 1974)

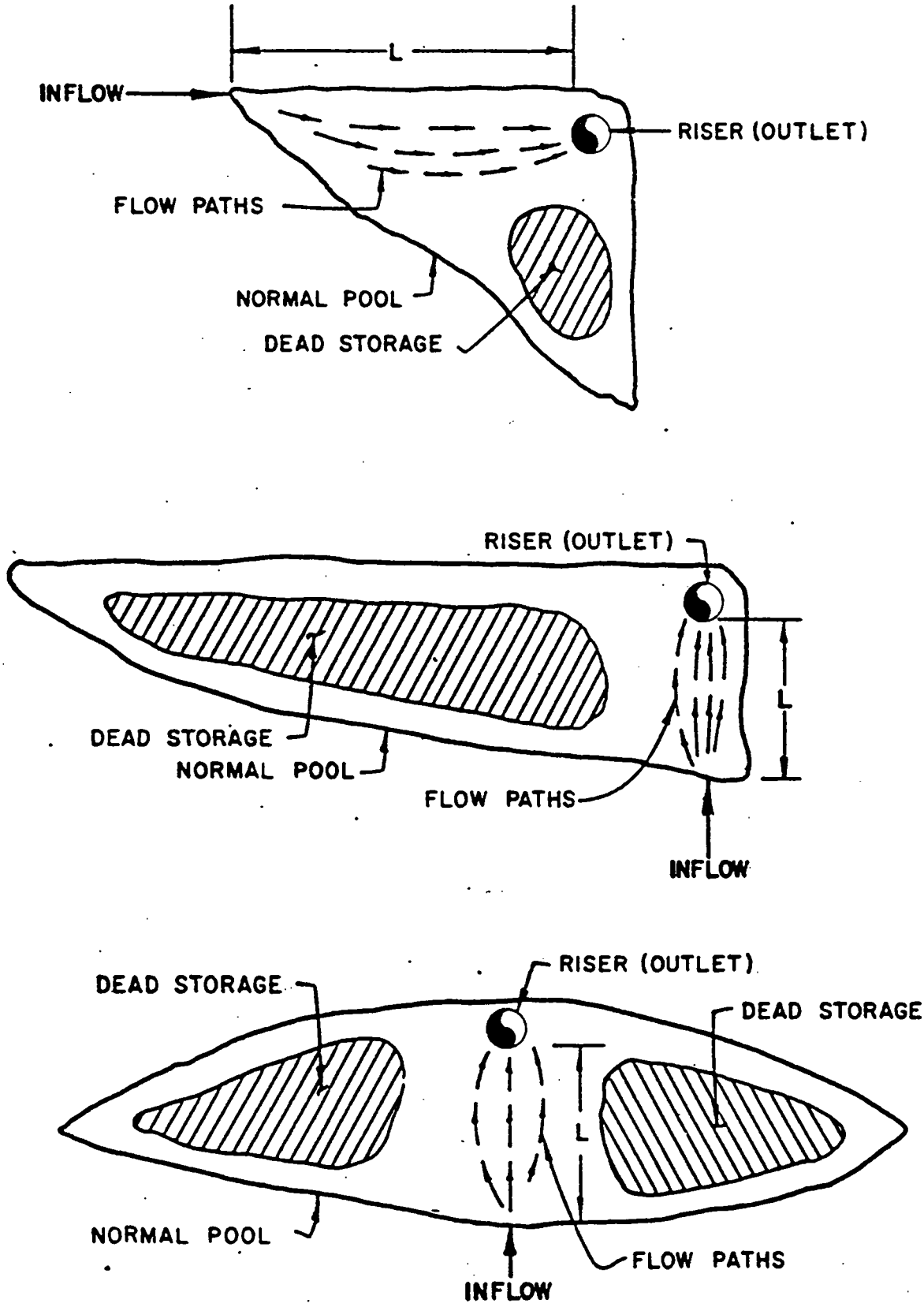

FIGURE 3.12 SEDIMENTATION PONDS WITH DEAD STORAGE SPACES (AFTER HAAN & BARFIELD, 1978)

ratio, short-circuiting factor, permissible inlet velocity, and permissible flow-through velocity. The sedimentation pond must meet these criteria to ensure that the desired sediment removal is attained.

3.8.3.1 Short-Circuiting Factor

Research by Camp (1946) on various types of settling basins has resulted in the development of a short-circuiting compensation factor based on the shape of the basin geometry. It has been recommended that the surface area of a settling basin be increased to account for nonideal settling conditions according to

$$A = (FSC \times \frac{Q_o}{V_s}) \tag{3.14}$$

where, A = surface area of the pond at the elevation of the principal spillway crest (ft^2),

FSC = short-circuiting factor,

Q_o = outflow rate (cfs), and

V_s = settling velocity of the design particle size (fps).

The value of FSC is generally 1.2. Equation 3.14 will yield the required surface area that is needed in the pond at the elevation of the principal spillway crest. There are three measures that can be taken if the pond surface area does not meet the requirement of Equation 3.14. The pond side slopes can be excavated, the elevation of the principal spillway crest can be raised, or application of multiple ponds.

3.8.3.2 Length-to-Width Ratio

The ratio between the flow length and the effective width of the sedimentation pond is used as a design aid to minimize short circuiting. Specifying a length-to-width ratio allows for utilization of the full surface area of the sedimentation pond and helps maintain a constant horizontal velocity through the sedimentation pond. The length that is used is the shortest distance that the water must flow from the inlet to the outlet of the pond. The width used in the computation is the effective width of the sedimentation pond. This is determined by dividing the surface area by the length from the inlet to the

outlet. The surface area of the pond is measured at the elevation of the principal spillway crest.

It is general practice to specify a minimum length-to-width ratio of 2:1. Larger length-to-width ratios will promote improved performance and values of up to 5:1 have been recommended. The length-to-width ratio is determined after the pond storage volume and outflow rate have been established. If this ratio cannot be satisfied, the flow length can be increased. Section 4.2 describes the measures that can be taken to increae the flow length.

Both the short-circuiting factor and the length-to-width ratio compensate for nonideal settling conditions. The short-circuiting factor determines only the required surface area, whereas the length-to-width ratio defines the shape of the surface area.

3.8.3.3 Permissible Inlet Velocity

For a sedimentation pond to be effective in sediment removal, the velocity of the flow into the pond must be small enough to prevent short circuiting. The criteria is used to limit the Froude number in the inlet channel to 1.0. The Froude number is defined as

$$F_r = \frac{V}{\sqrt{gD}} \tag{3.15}$$

where, F_r = Froude number,

V = velocity in the inlet channel (fps),

g = gravitational acceleration (32.2 ft/sec^2), and

D = depth of flow in the inlet channel (ft).

If the Froude number in the inlet channel is greater than 1.0, inlet control measures will be required. These measures are discussed in Section 4.2.

3.8.3.4 Permissible Flow-Through Velocity

The horizontal flow velocity through the pond must be less than the scour velocity of the design particle size to avoid resuspension of the settled sediment. The scour velocity for a specific particle size is determined by

$$V_{sc} = \sqrt{\frac{8B}{F} g(S_s - 1)\ d} \tag{3.16}$$

where, V_{sc} = scour velocity,

B = Shields' crticial shear stress parametr (0.047 for uniform sand),

g = gravitational acceleration (32.2 ft/sec^2),

S_s = specific gravity of particle (usually 2.6 to 2.8),

d = diameter of spherical particle (ft),

F = Darcy-Weisbach friction factor (usually 0.02 to 0.03).

Assuming that Shields' critical shear stress parameter is equal to 0.05, the specific gravity of the particle is 2.65, and the Darcy-Weisbach friction factor is 0.025, Equation 3.16 can be reduced to

$$V_{sc} = 1.67\ d^{1/2} \tag{3.17}$$

where, V_{sc} = scour velocity (fps) and

d = particle diameter (mm).

The horizontal velocity through the pond is

$$V_H = \frac{Q_o}{WD} \tag{3.18}$$

where, V_H = horizontal flow velocity (fps),

Q_o = outflow rate (cfs),

W = average width of sediment pond (ft), and

D = detention storage depth (ft).

If the horizontal velocity through the pond is greater than the scour velocity for the particle that must be settled, the depth can be increased to reduce the horizontal velocity which will also increase the width and decrease the outflow rate.

3.9 Sedimentation Pond Outlet Control Measures

Sedimentation ponds must provide a principal spillway and an emergency spillway. Principal spillways are designed to provide sufficient detention time during the design precipitation event to meet the effluent limitations and dewater the pond. Emergency spillways are designed to work in conjunction with the principal spillway and pond storage to safely discharge the peak runoff resulting from the design storm. The design procedure presented in Chapter VI develops the design discharge for sizing the principal spillway and the elevation above the bottom of the pond. Actual design of the outlet is not covered in this section. Several references provide design procedures for sizing standpipe and culvert-type spillways (U.S. Department of Transportation, 1965; Barfield 1981; Bureau of Reclamation, 1974; Soil Conservation Service, 1969). The following discussion presents important design considerations for principal and emergency spillways, various types and configurations, and effectiveness.

3.9.1 Principal Spillways

The principal spillway is sized to provide a discharge rate as determined through design of the sedimentation pond. Actual design should include evaluation of local drainage conditions, water rights, economics, land-use constraints, and requirements of local, state and federal regulations. Design of the principal spillway should not be independent of the design of the earth embankment and emergency spillway.

The types of principal spillways commonly used can be classified into three categories: open channel, drop inlet and pipe culverts. The type of spillway used is based on local site-specific conditions.

3.9.1.1 Open Channel Spillways

Open channel spillways should only be used when all other alternatives have been shown to be infeasible. This type of spillway provides no means of dewatering the pond. Typically open channel spillways are located on small drainage basins. Design of open channel spillways to meet effluent standards during base flow and design storm conditions is very difficult. When an open channel is used for the principal spillway it often is designed for the emergency capacity, or the emergency spillway is also an open channel. Open

channel spillways do not provide as much control of discharge or flexibility to modification as drop inlets or pipe culverts. Further discussion of open channel spillways is covered in Section 3.9.4 on emergency spillways.

3.9.1.2 Drop Inlet Spillways

Drop inlet spillways are one of the most common types of principal spillways used for sedimentation ponds. A drop inlet spillway is quite flexible in design, offers good control of discharge, and is well adapted to sedimentation ponds. A recommended minimum size for drop inlets is 12 inches in diameter. This mimimum size provides accessibility for maintenance and cleaning. When the design discharge for meeting effluent requirements results in a spillway size smaller than 12 inches in diameter, a 12-inch pipe is used with an orifice of the required size opening affixed to the inflow end of the drop inlet.

Configuration of a typical drop inlet is shown in Figure 3.13. A drop inlet has two main features, the barrel and riser. The riser and barrel can be of concrete, reinforced concrete, polyvinyl chloride (PVC), corrugated or smooth metal pipe. The selection of the type of material used should consider site conditions and economics.

In designing drop inlets an important consideration is anchoring of the riser and barrel on the bottom of the pond, and seepage along the barrel. Failure of the riser to stay anchored is a common problem. Anchoring of risers should consider the size of the riser, local soil type, type of pond, and weather conditions. If the pond is a permanent pool it is susceptible to freezing, and the forces created by the forming ice should be considered.

Seepage along the barrel is often the cause of dam embankment failure. The problem generally occurs due to the lack of compaction around the barrel during construction of the embankment.

3.9.1.3 Pipe Culvert Spillways

Another type of principal spillway commonly used is the pipe culvert, also referred to as a "trickle tube." It consists of a pipe laid in the earth in such a manner that the entrance elevation of the pipe (at the upstream end) establishes the normal pool elevation in the pond. Figure 3.14 shows a typical pipe culvert arrangement. Pipe culvert spillways require the same con-

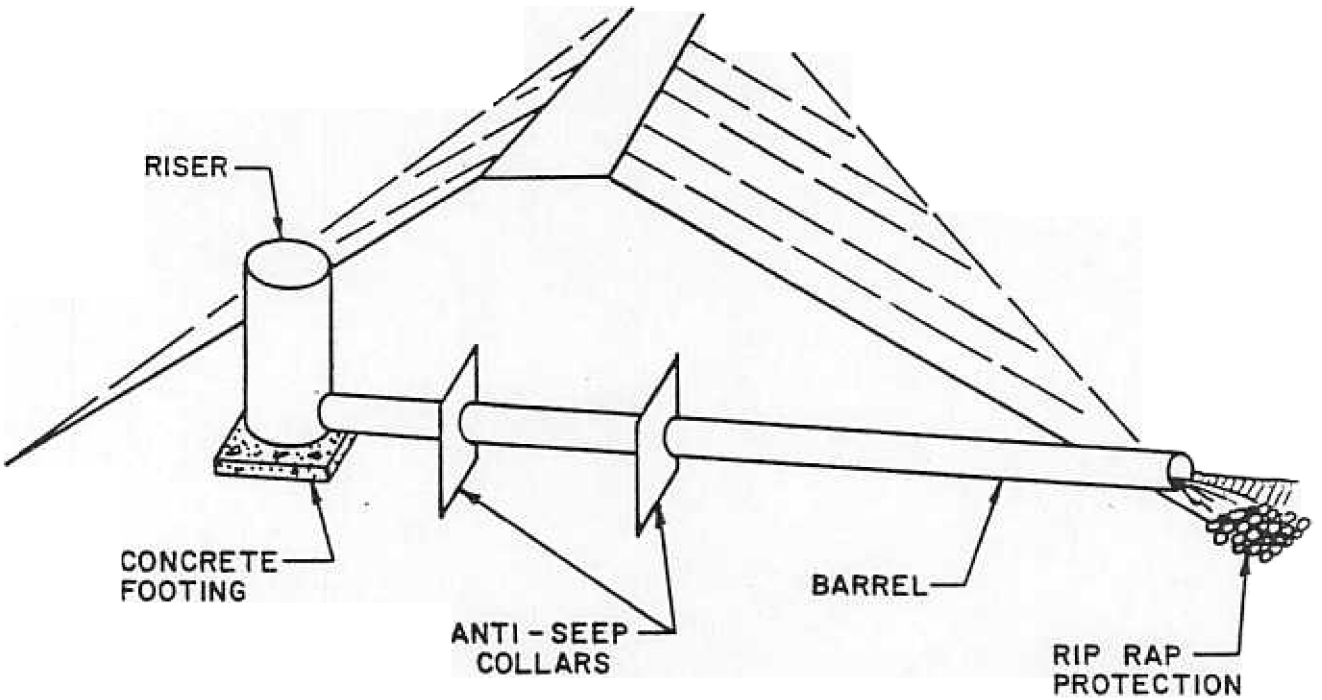

FIGURE 3.13 TYPICAL DROP INLET SPILLWAY

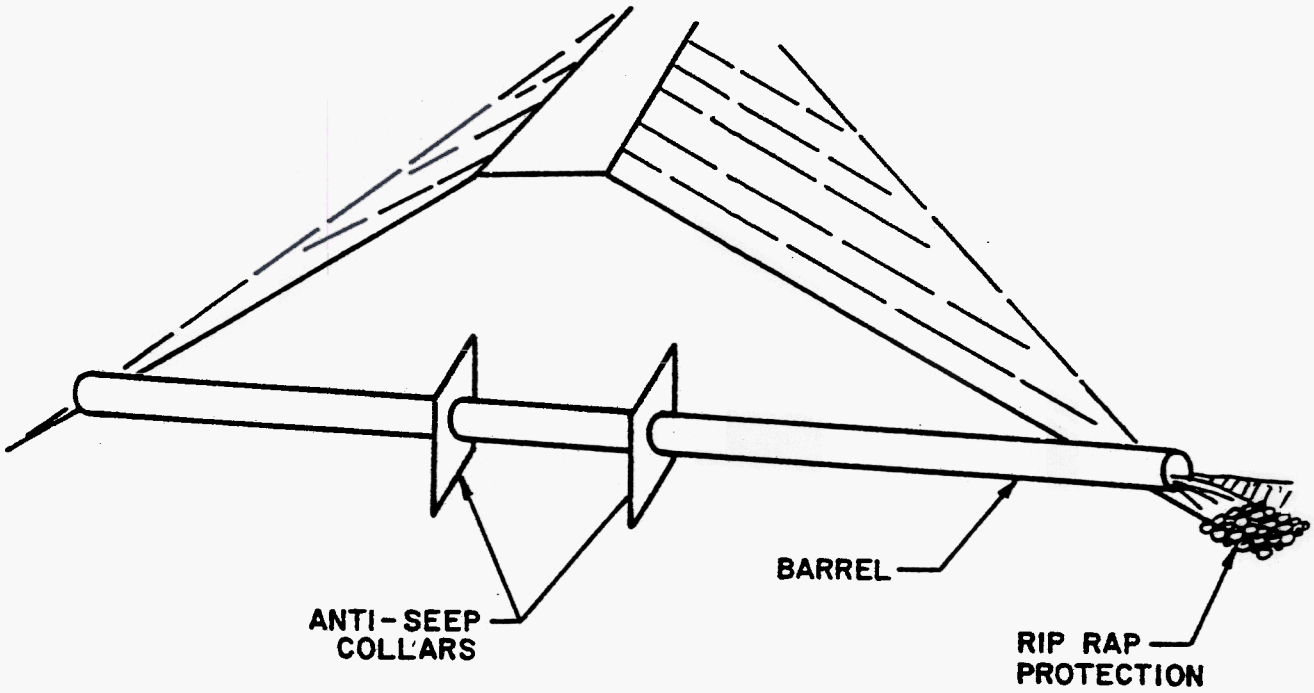

FIGURE 3.14 TYPICAL PIPE CULVERT SPILLWAY

sideration as drop inlet spillways do for seepage, minimum size and type of material.

3.9.1.4 Efficiency of Principal Spillways

In this section the efficiency of principal spillways is discussed in general. In Section 3.9.3 various modifications to principal spillways and their effect on discharge quality are presented. The size of the principal spillway is designed to convey the discharge required to achieve removal of sediment. The design discharge is determined during design of the sediment pond. Once the design discharge is properly determined, the effect of principal spillways on discharge quality is based on location, in relation to the geometry of the pond, and flow characteristics at the inlet end of the spillway.

The primary concerns in location of the principal spillway are an effective surface area and short circuiting. As discussed in Sections 3.8.2 and 3.8.3, the length-to-width ratio should be a minimum of 2:1, and a ratio of 5:1 is recommended. As the distance between the spillway and the pond inlet decreases, the effective surface area decreases. As the effective surface area decreases, the occurrence of short circuiting and turbulence is more likely, and the overall efficiency of the pond is reduced. The reduction in pond efficiency is variable and based on site-specific conditions. However, an estimate of the reduced efficiency can be based on the reduction in effective surface area of the pond.

The level at which the inlet of the principal spillway exists within the pond affects the efficiency of the pond. Because the sediment settles to the bottom of the pond, it is clear that there will be less sediment at the surface than near the bottom of the pond. Thus discharging from near the surface of the pond can improve the efficiency. This characteristic has been shown through use of floating weir devices and is dischssed further in Section 3.9.3.2.

Due to the turbulent nature at the principal spillway inlet, scour and resuspension of settled sediment is likely. The amount of scour and resuspension around a spillway is related to the elevation of the settled sediment. As the level of settled sediment approaches the elevation of the inlet of the spillway, scour and resuspension increase. Scour and resuspension are often

associated with dewatering. When dewatering is required it is impossible to avoid some resuspension and scour at all times. Comparison of various dewatering methods is presented in the following section.

3.9.2 Dewatering Devices

Dewatering is usually required to drain the sediment pond between runoff storms so adequate storage volume within the pond is maintained. Dewatering devices are not necessary when draining below the principal spillway is not required. Several methods of dewatering are used, including perforated risers, subsurface drainage, a single perforation with associated use of a skimmer baffle or a type of gate valve, siphon arrangement attached to the riser and/or pumping.

The use of perforated standpipe or riser for dewatering is required by some states. However, sediment is carried out of the pond through the perforations because of resuspension of settled solids due to turbulence near the perforations or because sediment is allowed to accumulate too high along the riser barrel. Use of a perforated riser is not recommended.

In the subsurface drain arrangement, a (four-inch) perforated plastic pipe network is laid in a trench in the bottom of the pond and covered with a fabric filter and sand as shown in Figure 3.15. The pipe is connected to the riser and the pond is dewatered through the sand filter/perforated pipe arrangement by gravity.

There are two advantages of a subsurface drain arrangement: (1) complete dewatering of the settled sediment is possible to aid in removal and disposal, and (2) no turbulence or resuspension of settled sediment is associated with this method. However, major disadvantages are clogging of the sand filter and filter fabric due to the nature of the settled sediment, the permeability of the settled sediment could result in exceedingly long dewatering time, and the added expense of installing this type of pipe arrangement.

A single perforation at the sediment cleanout level with a skimmer-baffle is shown in Figure 3.16. The single perforation method is easy to construct and is capable of completely draining the pool to the sediment clean-out level. With a skimmer, the perforation is non-clogging, fairly easy to construct, and an efficient skimmer of surface debris. Some type of valve can also be used to gate the perforation which allows control over the desired

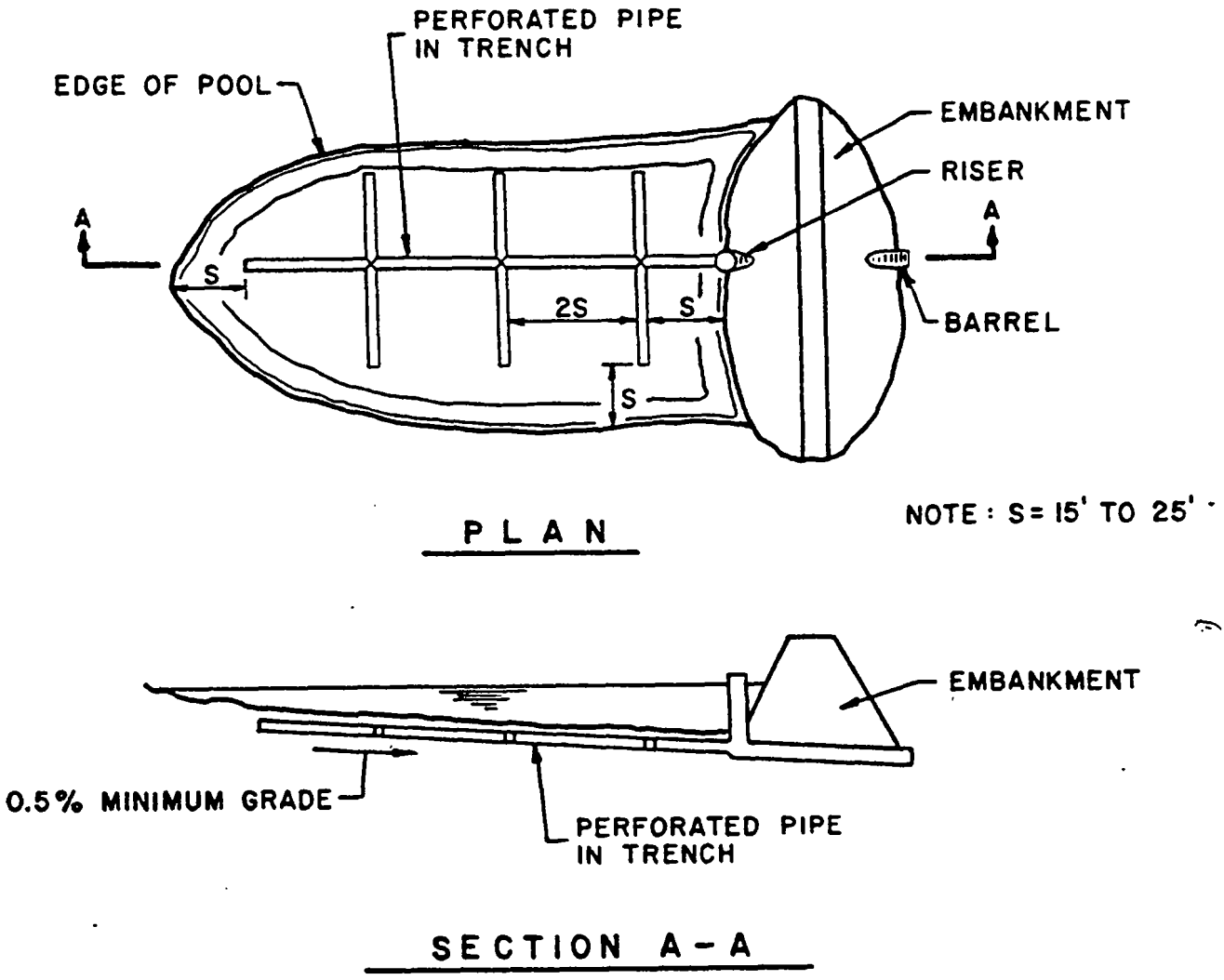

FIGURE 3.15 SUBSURFACE DRAIN (EPA, 1977)

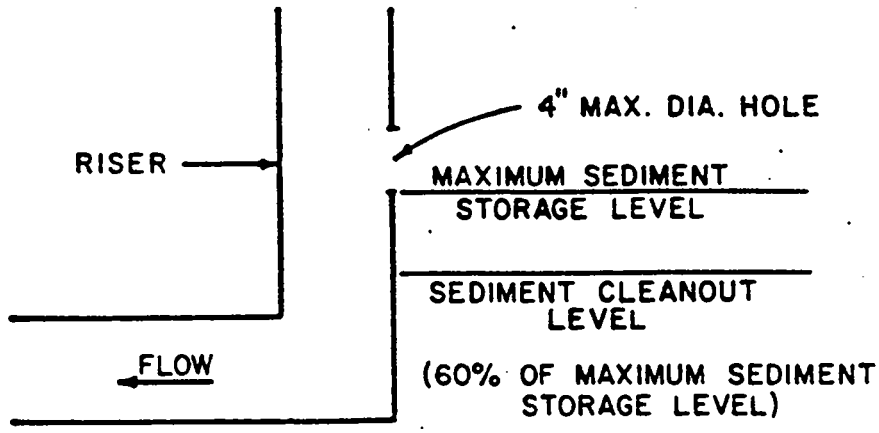

SINGLE PERFORATION
CROSS SECTION

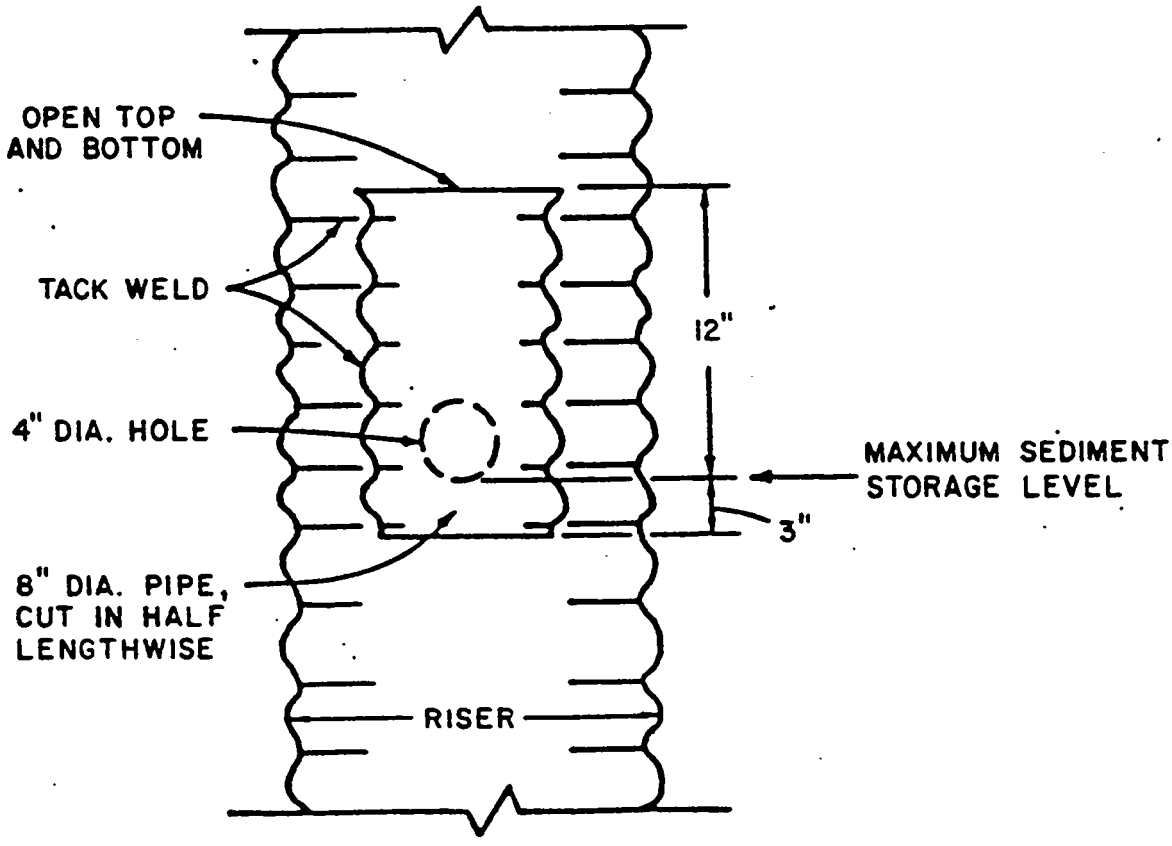

SINGLE PERFORATION WITH SKIMMER
ELEVATION

FIGURE 3.16 SINGLE PERFORATION OF RISER BARREL (EPA, 1977)

detention time before dewatering the pond. With the perforation, gated dewatering can be done after the runoff event is over and the required removal of sediment has occurred, thus reducing the amount of sediment discharged during dewatering.

With the siphon methods of dewatering, a (four-inch) pipe siphon can be substituted for the single perforation as described previously (Figure 3.17). The length of siphon depends on the dewatering time desired. In each case, the inlet to the siphon is placed at the elevation of the sediment clean-out level to facilitate drainage without removing sediment. The siphon is also an efficient skimmer of surface debris, will always drain the pond to the sediment clean-out level, and has a higher discharge capacity than the single perforation method with the same size of opening.

For excavated ponds without a permanent pool, risers may not be practical. Therefore, a self-priming or portable pump can be used to dewater the pond.

The effect of dewatering devices on the discharge quality depends greatly on the level of sediment in the pond. When sediment is allowed to accumulate up to the dewatering outlet, the amount of scour and resuspension of settled sediment increases, decreasing the discharge quality. Therefore proper maintenance and sediment removal can decrease the effects of dewatering. It is recommended that the sediment be cleaned out when it reaches 60 percent of the design sediment storage. For properly designed and constructed dewatering devices, the ability to maintain the discharge quality can be related to the level of control at the dewatering device. Perforated risers and single perforations provide less control than a single perforation with a baffle skimmer or a siphon type arrangement. A gate on the dewatering opening provides the most control by enabling the operator to vary the detention time and physically verify that the sediment has settled before dewatering the pond.

3.9.3 Principal Spillway Modifications

The purpose of modifications to drop inlet or pipe culvert spillways is to reduce short circuiting, eliminate turbulence, and thus increase trapping efficiency of the pond. After proper sizing, the effectiveness of a principal spillway is related to location within the pond, discharge point from within the pond, and turbulent flow conditions at the outlet. As discussed in

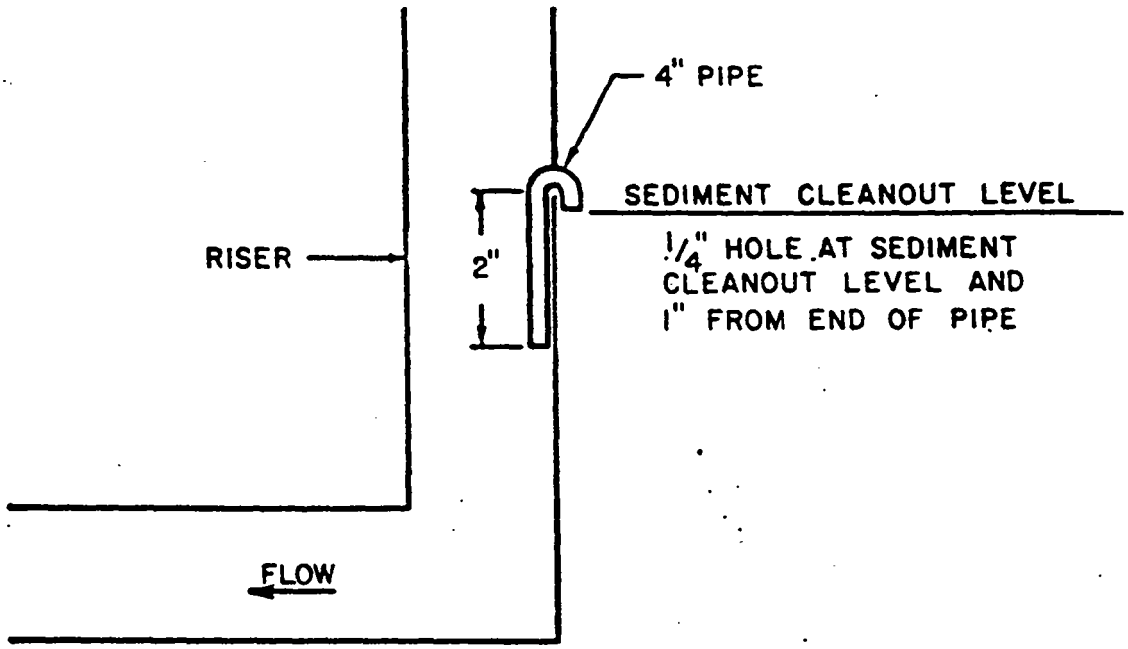

A. SHORT SIPHON CROSS-SECTION

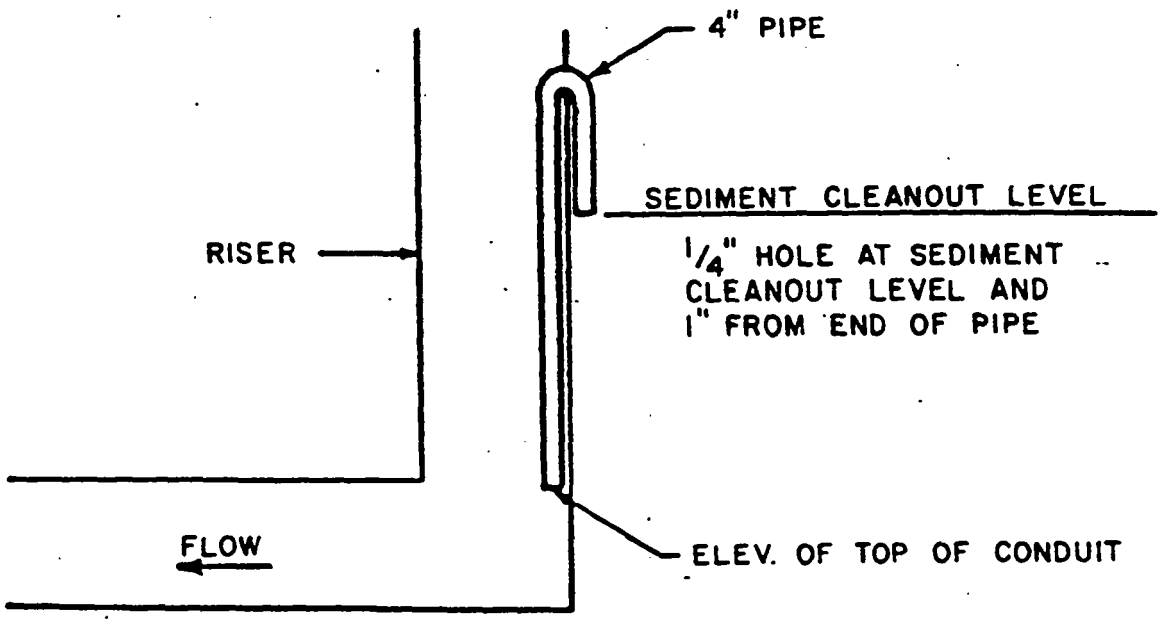

B. LONG SIPHON CROSS-SECTION

FIGURE 3.17 SIPHON DEWATERING METHODS (EPA, 1980)

Section 3.8.2.3, short circuiting and turbulence can reduce the trapping efficiency of the sedimentation pond. Studies of existing ponds have shown poor pond performance as a result of short circuiting and turbulence at the outlet of the pond (reference EPA, 1980; EPA, 1979; EPA, 1976). Several studies have made recommendations as to what spillway modifications can help improve the sediment removal efficiency of a particular pond. The following discussion presents some of the more commonly used modifications and their effects on discharge quality.

3.9.3.1 Weir Troughs

Drop inlets and culvert spillways are single point outlets that usually create short circuiting and resuspension. One modification that eliminates the point discharge is a weir trough connected to the outlet. A weir trough discharges along the length of the weir and creates less turbulence than a single discharge point. By discharging from more than a single point the flow-through area and effective surface area are also increased. Thus, by reducing turbulence and increasing the effective surface area, a weir trough outlet can provide improved discharge quality over that of a single point discharge outlet. Figure 3.18 shows a typical weir trough arrangement. In application of a weir trough, structural integrity and maintenance are required for effective operation and performance. Weir troughs are susceptible to the same structural problems as baffles (see Section 4.2.2.2).

3.9.3.2 Floating Discharge

Typical principal spillways are generally fixed and discharge from the same point elevation. As the water surface elevation in the pond rises above the spillway elevation, the concentration of sediment increases due to the settling of particles from the surface down. From this it is easy to see that the minimum concentration within the pond will be near or at the water surface elevation. Therefore, the discharge quality can be improved by discharging from the surface of the pond. A variable elevation discharge orifice has been field tested by OSM. Three tests were conducted using different outlet sizes. The results of the test showed settleable solids concentration in the discharge to be consistently less for the pivotal elbow type outlet as compared to a typical perforated riser outlet. This device was adapted from

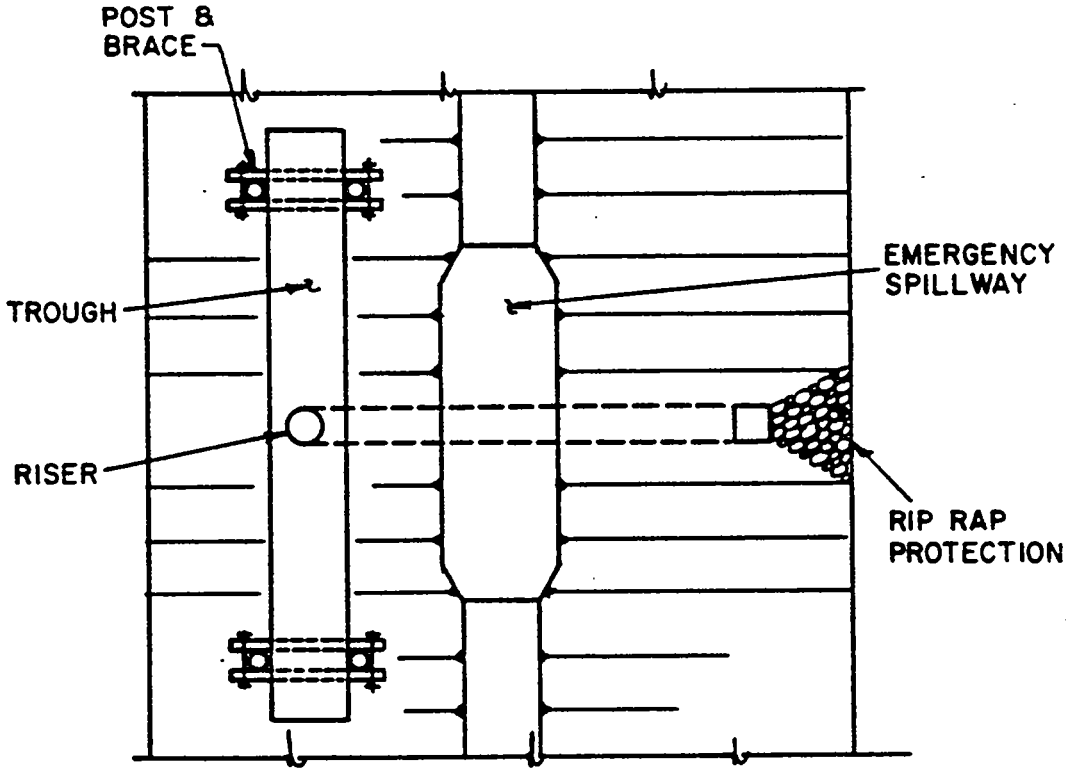

PLAN

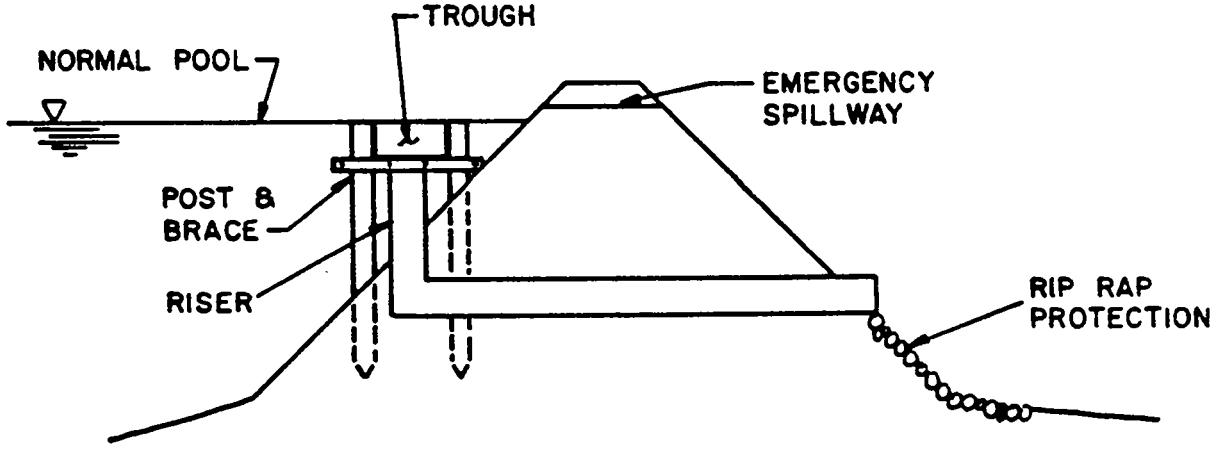

ELEVATION

FIGURE 3.18 WEIR TROUGH

floating weir spillways originally suggested for management of fish ponds. Figure 3.19 shows the device tested by OSM. The floating weir (or inclined arm) allows removal of surface water regardless of surface elevation. The floating weir consists of a riser pipe connected to the drain via a pivotal 90° elbow designed and constructed to enable quarter rotation about the axis of the drain. Buoyancy and submerged depth of the orifice are adjusted by weights and flotation jugs to maintain the orifice to two to four inches below the water surface (OSM, draft report). Discharge is controlled by varying the orifice size. Another advantage to this device is that it can also provide dewatering of the pond.

3.9.3.3 Filtering

As in municipal water treatment, filtering of the discharge can greatly improve the quality by removing finer sediments that do not settle out in the pond. Riser pipe filters have been used to improve trapping efficiency. Riser pipe filters include cloth or fiberglass wraps and gravel cones placed around the filters. The filter wraps have been found to be fairly effective in trapping fine particles. However, the filter wraps become clogged very rapidly (Oscaryan, 1975). This clogging may cause the water level in the pond to rise above the riser crest, thus negating the filter effect.

Another inexpensive filtering mechanism is the use of straw bales around an outlet. This method is most applicable to pipe culverts. Straw bales, like filter wraps, are effective in trapping fine particles; however, they require frequent maintenance.

3.9.3.4 Gated Spillways

A gated spillway gives the operator complete control of the discharge from the pond. With the gate closed the pond is allowed to fill and completelystore the runoff from a rainfall event. After an adequate time period for settling of the sediment, the gate valve is opened and the pond allowed to drain.

Gated spillways are applicable only to ponds that do not have a constant base flow or ponds on ephemeral drainages. The pond should be designed to store the entire runoff volume from the design rainfall event. Often times ponds with gated spillways are designed to store twice the design runoff

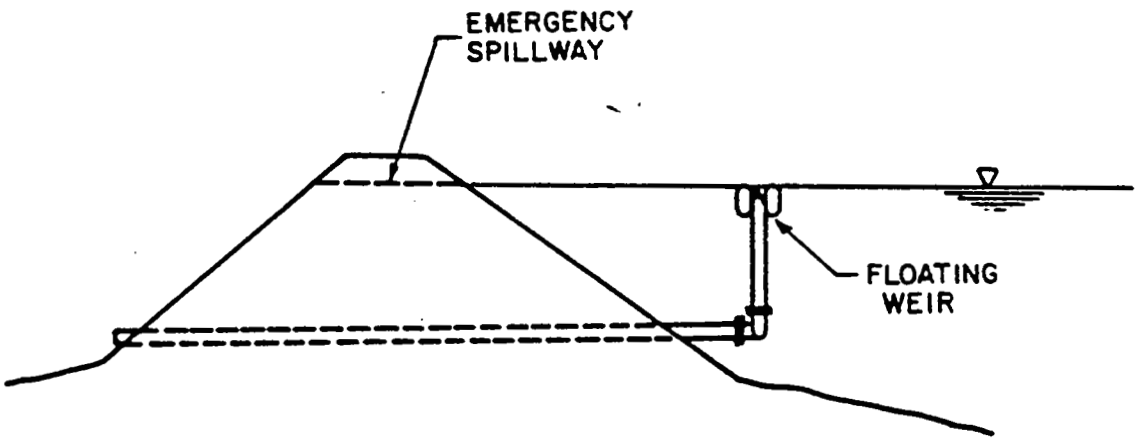

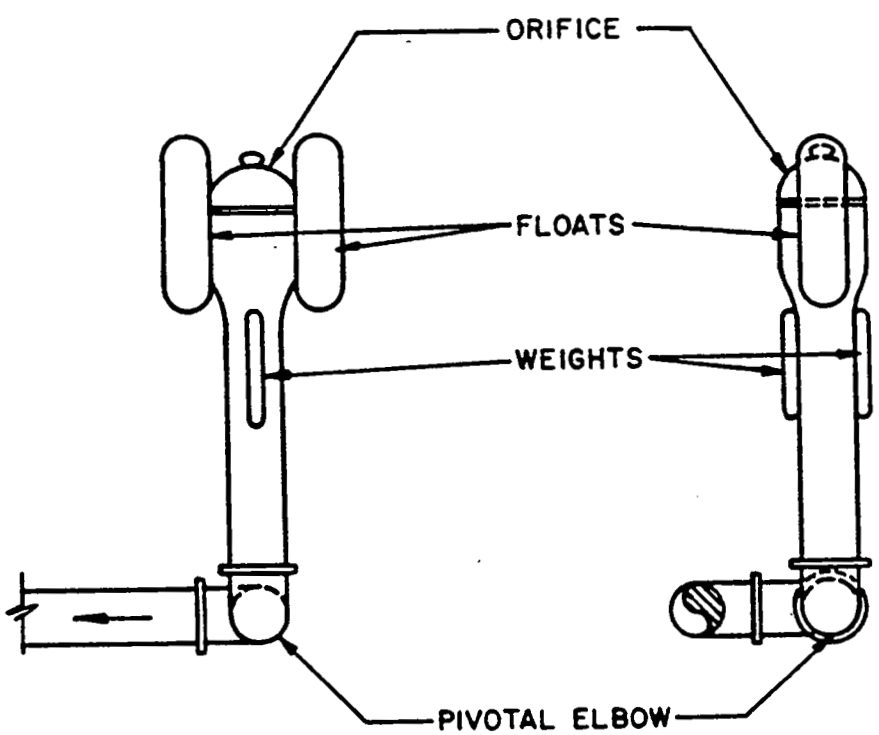

FIGURE 3.19 FLOATING WEIR

volume due to the nature of one or more rainfall events to occur within a short time period.

Slide gates or butterfly valves are usually used for control at the downstream end of the outlet conduit. Gates can also be used at the upstream end (within the pond) of the spillway, however, access must be provided when the pond is full. Again, proper maintenance is necessary to keep the valves in good working condition.

Gated spillways have an indirect effect on discharge water quality. As stated previously, a gated spillway enables the operator to increase the detention time within the pond. Thus, the longer the operator is able to store the runoff in the pond, the more settling can take place, and thus improve the discharge water quality.

3.9.3.5 Anti-Vortex Devices

An anti-vortex device is used to reduce turbulence at the outlet and to reduce the range of headwater depth where slug-flow action prevails and to allow full pipe flow to occur at a lower headwater depth. Slug-flow action results from the induction of air into the conduit by entrance drawdown and vortices immediately upsteam of the inlet. If no anti-vortex device is used, discharge efficiency values may be reduced by up to 50 percent (SCS, 1975).

Anti-vortex devices include grills, racks, vertical plates, or fixed solid hoods placed to break up the vortices or to prevent their formation where they could feed air into the conduit (Figure 3.20). In order to be effective, the hood or grill must be placed immediately above the entrance and the area between the inside of the anti-vortex device and the outside of the riser must be equal to or greater than the area inside the riser.

Another anti-vortex device is a thin, vertical plate normal to the centerline of the dam and firmly attached to the top of the riser. Length of the plate must equal the diameter of the riser plus 12 inches and height must equal the diameter of the barrel.

3.9.4 Emergency Spillways

Emergency spillways are used to convey large flood events safely out of the pond without overtopping or breaching the dam. For dams less than 20 feet in height or 20 acre-feet in active storage, OSM requirements call for design-

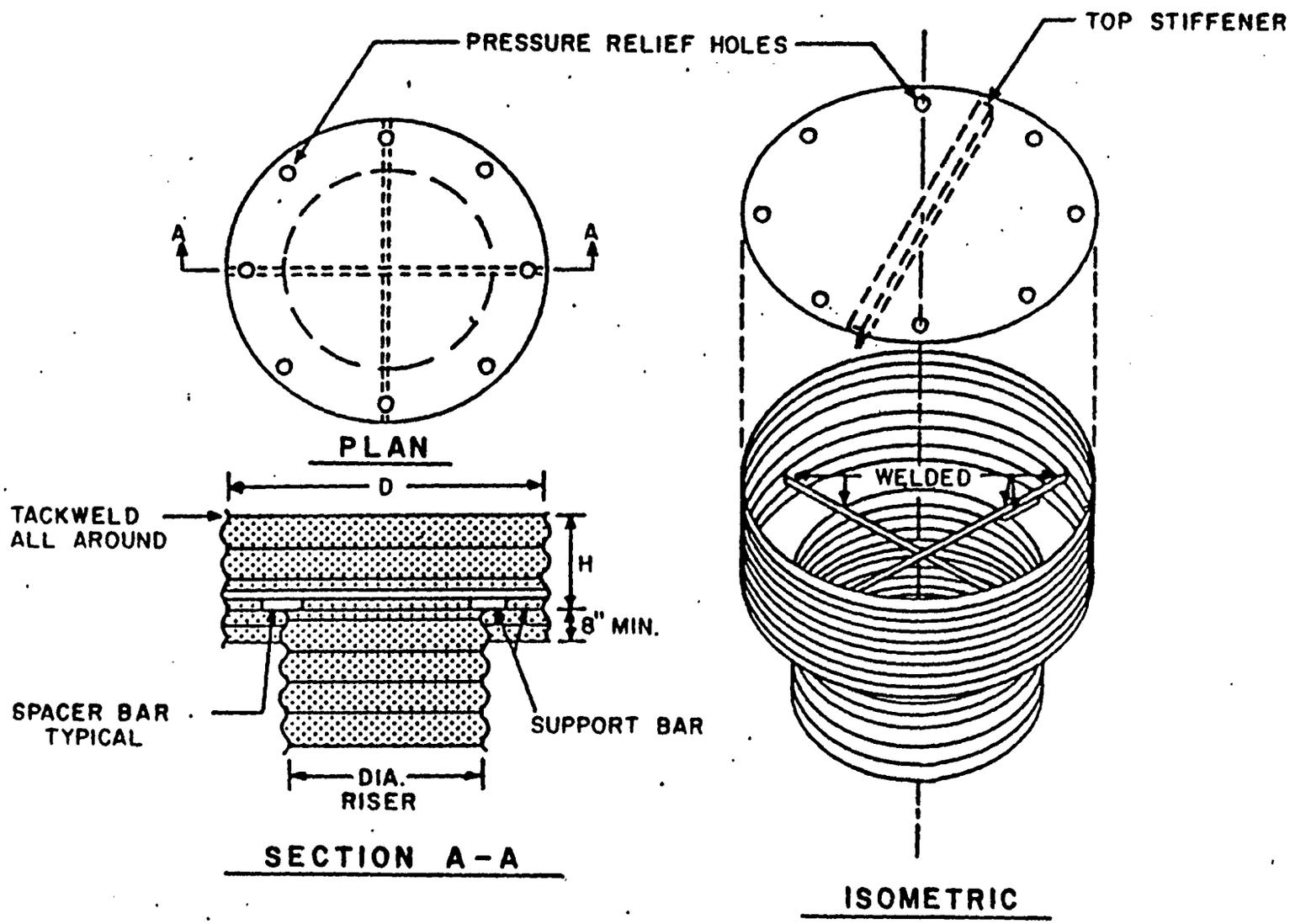

FIGURE 3.20 ANTI-VORTEX DEVICE (SCS, 1975)

ing the combination of the principal and the emergency spillway to safely convey the runoff resulting from the 25-year, 24-hour precipitation event. For larger dams, the spillways must safely dicharge the runoff resulting from the 100-year, 24-hour precipitation event or a larger event as required by the regulatory agency. The design of the emergency spillway should take into account the design discharge of the principal spillways. In general, emergency spillways consist of a crest section, a conveyance section, and a discharge section. There are two types of emergency spillways, overflow spillway and channel spillway.

Selection of the type of emergency spillway is dependent on the soils and climate of the site. Vegetated emergency spillways have higher protection from damaging erosion than earth spillways. They are applicable to sites where a vigorous grass growth can be sustained by normal maintenance without irrigation.

Earth spillways are used in those areas where vegetative growth cannot be maintained. They are similar to vegetated spillways but are designed for lower permissible velocities and less frequent use. Normally, they will require more maintenance after a flow event.

Rock emergency spillways are applicable on undisturbed land where parent bedrock material is present. Allowable frequency of use and permissible velocities must be ascertained for the specific site based on a knowledge of hardness, condition, durability, weathering characteristics, and structure of the rock formation.

Excavated open channel spillways are to have cut-and-fill slopes in earth and rock which are stable against sliding. If the dam is to be permanent, cut slope stability is to be evaluated for the long-term natural moisture conditions. Side slopes shall be stable for the material in which the spillway is constructed and shall not be steeper than 3 horizontal to 1 vertical in earth and 1 horizontal to 1 vertical in rock.

The exit channel should be straight whenever possible. Slope of the constructed exit channel should fall within the range established by discharge requirements and permissible velocities based on spillway material (Tables 3.5 and 3.6). Riprap may be used to stabilize the spillway for higher design velocities. Spillway discharge should be at a point downstream from any part

Table 3.5. Permissilbe Velocities for Vegetated Spillways[1] (Soil Conservation Service, 1981).

	Permissible Velocity in fps			
	Erosion Resistant Soils[2]		Easily Erodible Soils[2]	
	Slope of Exit Channel in percent		Slope of Exit Channel in percent	
Vegetation	0 to 5	5 to 10	0 to 5	5 to 10
Bermudagrass Bahiagrass	8	7	6	5
Buffalograss Kentucky bluegrass Smooth bromegrass Tall fescue Reed Canarygrass	7	6	5	4
Sod-forming grass legume mixtures	5	4	4	3
Lespedeza sericea Weeping lovegrass Yellow bluestem Native grass mixtures Annuals	3.5	N/A[3]	2.5	N/A[3]

1 SCS-TP-61

2 As defined in TR-52

3 Use on slopes steeper than 5 percent is not recommended.

Table 3.6. Permissible Spillway Velocities after Aging[1].

Original Material Excavated	Feet per second
Fine sand, non-colloidal	2.50
Sandy loam, non-colloidal	2.50
Silt loam, non-colloidal	3.00
Alluvial silts, non-colloidal	3.50
Ordinary firm loam	3.50
Volcanic ash	3.50
Fine gravel	5.00
Stiff clay, very colloidal	5.00
Graded, loam to cobbles, non-colloidal	5.00
Alluvial silts, colloidal	5.00
Graded, silt to cobbles, colloidal	5.50
Cobbles and shingles	5.50
Coarse gravel, non-colloidal	6.00
Shales and hardpans	6.00

[1] Recommended in 1926 by Special Committee on Irrigation Research, American Society of Civil Engineers.

[2] Values shown apply to water transporting colloidal silts.

of the earth embankment. If this is not practical, a wing dike should be constructed to prevent flows from encroaching on the downstream toe of the dam.

Elevation of the crest of the emergency spillway is dependent upon the type of spillway to be used. In all cases, the design depth of water over the spillway must be a minimum of one foot below the elevation of the settled height of the dam. The current OSM regulations allow discharge through the emergency spillway for events less than the 10-year, 24-hour precipitation event as long as effluent limitations are achieved. Therefore, the elevation difference between the principal spillway and the emergency spillway is site dependent. Local state requirements may specify full containment of the design storm.

3.9.5 Erosion Control Below Spillways

3.9.5.1 General

During operation, the outlet discharge from the principal spillway of a sedimentation pond is a highly concentrated, fast-moving jet (with its associated turbulence) that has considerable potential for causing damage downstream. If protective measures are not taken, pond discharge can cause erosion downstream of the structure; undermine the outlet; form a wide, deep scour hole in the outlet area; and possibly endanger the safety of the dam embankment. Protection is necessary to prevent the jet and its associated turbulence from causing erosion until the jet flow has dissipated to a milder, non-scouring flow. The most common method of protecting the channel from erosive forces caused by high velocities and turbulent flow is to line the channel with riprap. In this manner, the channel is protected from erosion until the outflow jet has dissipated to a milder flow condition of decreased velocity and turbulence.

Where the pond will discharge onto an area which had not previously been exposed to flow, there is the likelihood of severe erosion from the flow over loose soils. On the other hand, if the pond discharges into a well-armored natural channel, the downstream erosion affects will be minimal. Alignment of the outlet and the channel at the outlet should be straight so discharge does not impinge on any of the channel banks a short distance downstream. By properly choosing an outlet location and geometry, the amount of downstream ero-

sion is minimized. The application and design of riprap for erosion control below principal spillways are discussed in the following sections.

3.9.5.2 Riprap

Riprap consists of a layer of discrete fragments of durable rock possessing sufficient size to withstand the dynamic, erosive forces generated by the flow of water. Riprap should be hard, dense, and durable to withstand long exposure to weathering. In surface mining operations, riprap is the most common and economical means of preventing erosion of channel bed and banks upstream and particularly downstream of sedimentation ponds where there is a high erosive potential due to contraction of flow, flow alignment, changes in slope, and etc. When the material is of sufficient size, shape, gradation, and hardness, riprap is excellent erosion protection.

The important factors to be considered in designing rock riprap protection are: rock durability, density, size, weight, shape, and angularity; direction and maganitude of the velocity of flow near the rock; bed or bank slope; and angle of repose of the rock. In addition, the desired level of protection may not be provided by the riprap if design criteria concerning rock gradation, placement, riprap thickness, and filter design are not considered.

There are many means and methods by which riprap protection can be constructed and placed. Following is a categorization of riprap materials and methods of placement:

- Dumped riprap
- Hand-placed riprap
- Wire-enclosed riprap (gabion)
- Grouted riprap

When available in sufficient size, dumped rock riprap is usually the most economical material for bank protection. Dumped rock riprap has many advantages over other types of protection, including its flexibility and the ease of local damage repair. Construction must be accomplished in a prescribed manner but is not complicated. If riprap is placed during construction of the embankment, rocks can be dumped directly from trucks from the top of the embankment. To prevent segregation of sizes, rock should never be placed by dropping down the slope in a chute or pushed downhill with a bulldozer.

Dumped riprap can be placed with a minimum of expensive hand work. The appearance of dumped riprap is natural, and after a time, vegetation will grow between the rocks. Finally, in temporary channels when usefulness of the protection is finished, the rock is salvageable.

Dumped riprap is extensively used on surface mine sites due to the availability of rock and the ease of placement. Sizing of riprap is important for the proper stability and erosion control. Several references for sizing riprap are available (Simons, Li & Associates, Inc., 1982; Barfield, 1981, Bureau of Reclamation, 1977).

3.10 Summary

Sedimentation pond design is based upon meeting effluent limitations for the design storm runoff event. A particle size that must be removed in the pond is determined such that effluent limitations are satisfied. The pond configuration is then determined to provide the required settling conditions. This requires an interative process. Once the pond configuration is established, the principal spillway is sized to produce the required detention time and the emergency spillway is then sized so that the combination of principal and emergency spillways are adequate. The final step in the design process is to check the effluent for base flow conditions after the pond is operational. The design example in Chapter VI presents how the previous sections are interrelated in the design process.